REISSUE			
—	F	D	REVISION BY DATE

ENGR USE ONLY		
STD ENGR SPEC	TOLERANCES WILL BE IN ACCORDANCE WITH STANDARD SATISFACTORY TOLERANCE LIMITATIONS OUTLINED IN STANDARD ENGINEERING SPECIFICATIONS (±1/64 DEG) UNLESS OTHERWISE SPECIFIED. ALL DIMENSIONS IN INCHES DO NOT SCALE DRAWINGS	THE TRANE COMPANY LA CROSSE, WISCONSIN
SIMILAR TO BX39680155	FIRST USED ON ASSY NO A2701-3560	THIS DRAWING IS THE PROPERTY OF THE TRANE COMPANY AND IS PROPRIETARY IN GENERAL AND IN DETAIL. IT SHALL NOT BE COPIED OR ITS CONTENTS REVEALED TO OUTSIDE PARTIES WITHOUT THE WRITTEN CONSENT OF THE TRANE COMPANY.
DR: GOUFF 4/8/87	CHKD: LH OLSON 5-13-87	ENGR APPR

B X39680366

LABEL-SYSTEM WIRING DIAGRAM SOLID STATE EPC KIT SFHA-1004,A

SCALE NONE

QTY REQ'D EXT 6	EXT 5	EXT 4	EXT 3	EXT 2	EXT 1	EXT	ITEM	PART NAME	MATERIAL	DRG SIZE	DRAWING, PART OR MATERIAL NO
						01					

SPECS:
SIZE- DIAGRAM IS TO BE PROPORTIONALLY REDUCED AND PRINTED ON A 11x17 SHEET.
MATERIAL- WHITE PRESSURE SENSITIVE BOND PAPER, PERMANENT ADHESION, CRACK AND PEEL OR SPLIT BACKING.
PRINTING- BLACK LETTERS AND DIAGRAM ON WHITE BLACKGROUND

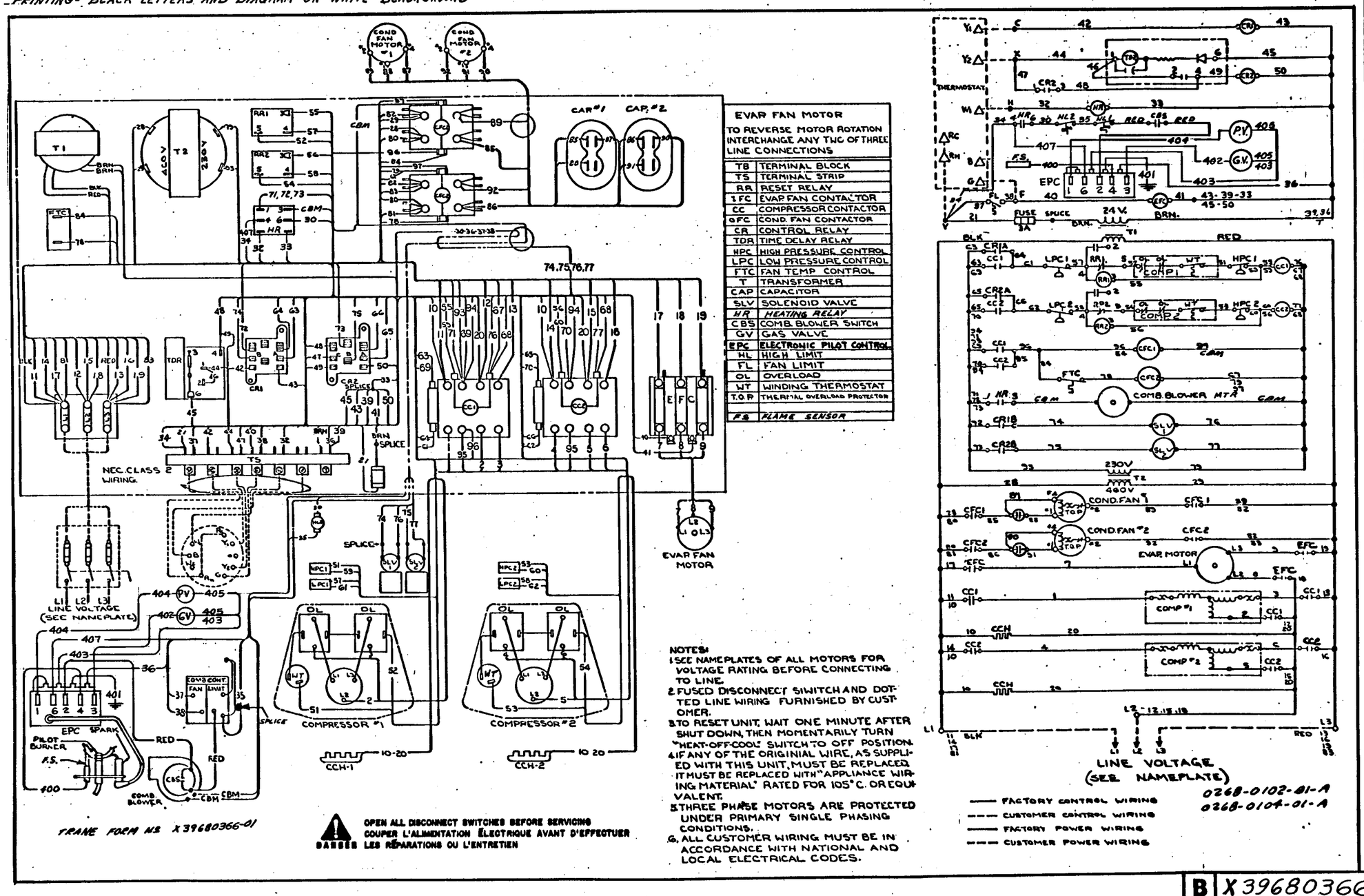

EVAP FAN MOTOR	
TO REVERSE MOTOR ROTATION INTERCHANGE ANY TWO OF THREE LINE CONNECTIONS	
TB	TERMINAL BLOCK
TS	TERMINAL STRIP
RR	RESET RELAY
1FC	EVAP FAN CONTACTOR
CC	COMPRESSOR CONTACTOR
2FC	COND. FAN CONTACTOR
CR	CONTROL RELAY
TDR	TIME DELAY RELAY
HPC	HIGH PRESSURE CONTROL
LPC	LOW PRESSURE CONTROL
FTC	FAN TEMP CONTROL
T	TRANSFORMER
CAP	CAPACITOR
SLV	SOLENOID VALVE
HR	HEATING RELAY
CBS	COMB. BLOWER SWITCH
GV	GAS VALVE
EPC	ELECTRONIC PILOT CONTROL
HL	HIGH LIMIT
FL	FAN LIMIT
OL	OVERLOAD
WT	WINDING THERMOSTAT
T.O.P	THERMAL OVERLOAD PROTECTOR
FS	FLAME SENSOR

NOTES:
1. SEE NAMEPLATES OF ALL MOTORS FOR VOLTAGE RATING BEFORE CONNECTING TO LINE.
2. FUSED DISCONNECT SWITCH AND DOTTED LINE WIRING FURNISHED BY CUSTOMER.
3. TO RESET UNIT, WAIT ONE MINUTE AFTER SHUT DOWN, THEN MOMENTARILY TURN "HEAT-OFF-COOL" SWITCH TO OFF POSITION.
4. IF ANY OF THE ORIGINAL WIRE, AS SUPPLIED WITH THIS UNIT, MUST BE REPLACED, IT MUST BE REPLACED WITH "APPLIANCE WIRING MATERIAL" RATED FOR 105°C. OR EQUIVALENT.
5. THREE PHASE MOTORS ARE PROTECTED UNDER PRIMARY SINGLE PHASING CONDITIONS.
6. ALL CUSTOMER WIRING MUST BE IN ACCORDANCE WITH NATIONAL AND LOCAL ELECTRICAL CODES.

FRAME FORM NO. X39680366-01

DANGER: OPEN ALL DISCONNECT SWITCHES BEFORE SERVICING
COUPER L'ALIMENTATION ÉLECTRIQUE AVANT D'EFFECTUER LES RÉPARATIONS OU L'ENTRETIEN

B X39680366