MATERIAL:

FLEXCON WHITE VINYL (2 MIL THICK) WITH PRESSURE SENSITIVE ADHESIVE BACKING AND RELEASE PAPER. ADHESIVE FOR OUTDOOR APPLICATION ON PAINTED OR GALVANIZED METAL.

SIZE: 8-1/4" X 13"

ALL PRINTING TO BE BLACK.
PURCHASING TO SUPPLY VENDOR WITH REDUCED FILM NEGATIVE OF THIS DRAWING. VENDOR TO RETURN FILM NEGATIVE AS SOON AS POSSIBLE.
WIRING DIAGRAMS TO BE SUPPLIED IN ROLLS IN TANDEM-SLIT CUT OR SHEETS.
NEGATIVE MADE FOR PRINTED MATERIAL.

UNLESS OTHERWISE SPECIFIED ALL DIMENSIONS ARE IN INCHES. TOLERANCE:

.X =± 0.1
.XX =± 0.03
.XXX =± 0.005

FINISH ✓

ANGLES =± 2.0 ° HOLE DIA = +/-

CONFORMS TO ASME Y14.5M-1994.

TRANE
A DIVISION OF AMERICAN STANDARD INC.
ALL RIGHTS RESERVED

THIS DRAWING IS PROPRIETARY AND SHALL NOT BE COPIED OR ITS CONTENTS DISCLOSED TO OUTSIDE PARTIES WITHOUT THE WRITTEN CONSENT OF TRANE

DRAWN BY: J.EATON © DATE: 27 Apr 06

DO NOT SCALE PRINT

THIRD ANGLE PROJECTION

4367-0343 SHEET 1 OF 1 REV A

DIAGRAM-WIRING
TWA's

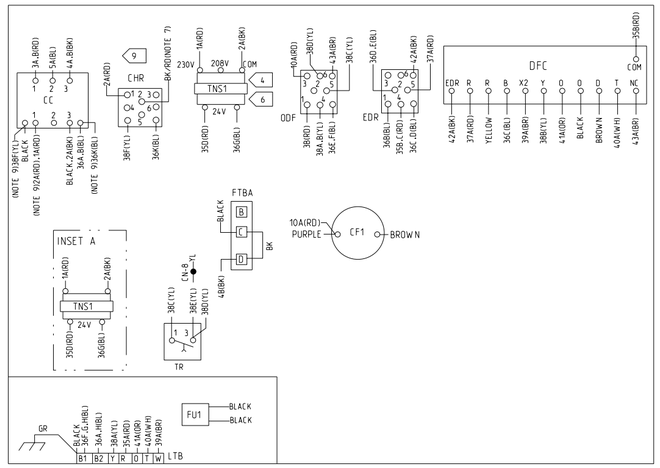

NOTES:
1. LOW VOLTAGE WIRING MUST BE 18 AWG MINIMUM.
2. MAXIMUM EXTERNAL LOW VOLTAGE LOAD 1.8 AMPS 24 V.A.C. DOES NOT INCLUDE ACCESSORIES BUT DOES INCLUDE INDOOR BLOWER RELAY.
3. SEE WIRING DIAGRAM WITH HEATER FOR DETAILS OF HEATER WIRING.
4. CONNECTIONS SHOWN ARE FOR 230V/60HZ/3PH. WHEN 208V/60HZ/3PH OPERATION IS REQUIRED:
   (A) AT TRANSFORMER, MOVE 1A(RD) LEAD FROM 230V TRANSFORMER TERMINAL TO 208V TERMINAL.
5. IF EVAPORATOR DEFROST CONTROL (EDC) IS USED, REMOVE JUMPER BETWEEN "B1" AND "B2".
6. CONNECTIONS FOR THE 230V/3PH/60HZ UNIT ARE SHOWN. FOR 400V, 460V, AND 575V UNITS, SEE TRANSFORMER CONNECTIONS IN INSETS "A" AND "B".
7. ON ALL NOTE 7 REFERENCES, LEAD COLOR IS BK/BR ON TWA090/120AW MODELS, BK/YL ON TWA090A3, AND BK/RD ON ALL OTHER MODELS.
8. DO NOT JUMPER COMPRESSOR PROTECTION SWITCH (CPS), OR THE HIGH PRESSURE CUT-OUT SWITCH (HPCO).
9. THE CRANKCASE HEATER RELAY (CHR) AND WIRES 2A(RD),38F(YL), AND 36K(BL) ARE NOT USED ON TWA075/100AD,090A3/A4/AW MODELS. ON TWA075/100AD,090A3/A4/AW MODELS, "BK/RD(NOTE 7)" WIRE WILL CONNECT TO CC-1 IN PLACE OF 2A(RD).

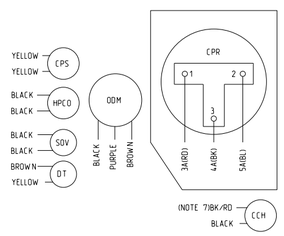

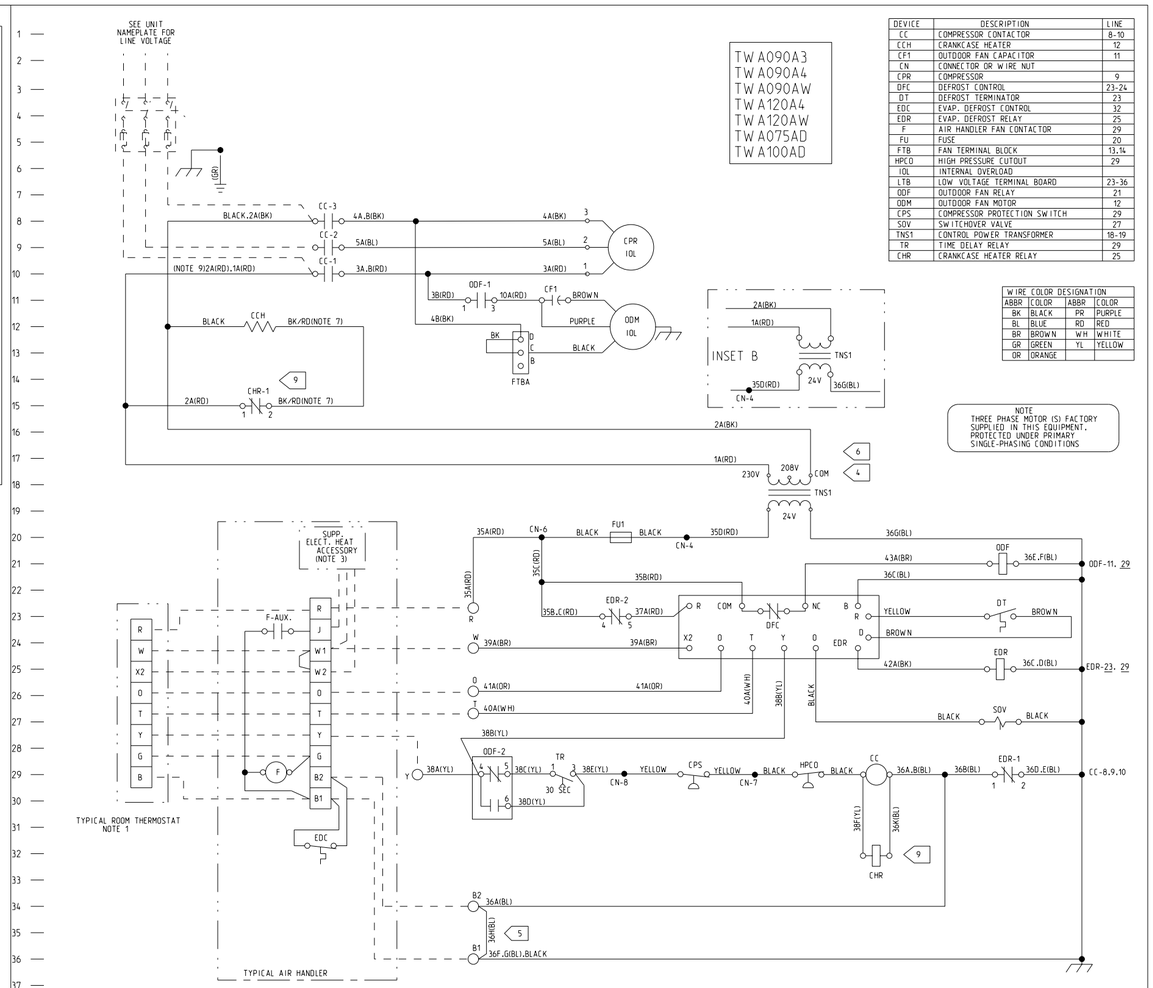

DEVICE	DESCRIPTION	LINE
CC	COMPRESSOR CONTACTOR	8-10
CCH	CRANKCASE HEATER	12
CF1	OUTDOOR FAN CAPACITOR	11
CN	CONNECTOR OR WIRE NUT	
CPR	COMPRESSOR	9
DFC	DEFROST CONTROL	23-24
DT	DEFROST TERMINATOR	23
EDC	EVAP. DEFROST CONTROL	32
EDR	EVAP. DEFROST RELAY	25
F	AIR HANDLER FAN CONTACTOR	29
FU	FUSE	20
FTB	FAN TERMINAL BLOCK	13,14
HPCO	HIGH PRESSURE CUTOUT	29
IOL	INTERNAL OVERLOAD	
LTB	LOW VOLTAGE TERMINAL BOARD	23-36
ODF	OUTDOOR FAN RELAY	21
ODM	OUTDOOR FAN MOTOR	12
CPS	COMPRESSOR PROTECTION SWITCH	29
SOV	SWITCHOVER VALVE	27
TNS1	CONTROL POWER TRANSFORMER	18-19
TR	TIME DELAY RELAY	29
CHR	CRANKCASE HEATER RELAY	25

WIRE COLOR DESIGNATION			
ABBR	COLOR	ABBR	COLOR
BK	BLACK	PR	PURPLE
BL	BLUE	RD	RED
BR	BROWN	WH	WHITE
GR	GREEN	YL	YELLOW
OR	ORANGE		

NOTE
THREE PHASE MOTOR (S) FACTORY SUPPLIED IN THIS EQUIPMENT, PROTECTED UNDER PRIMARY SINGLE-PHASING CONDITIONS

⚠ WARNING
HAZARDOUS VOLTAGE!

DISCONNECT ALL ELECTRIC POWER INCLUDING REMOTE DISCONNECTS AND FOLLOW LOCK OUT AND TAG PROCEDURES BEFORE SERVICING. INSURE THAT ALL MOTOR CAPACITORS HAVE DISCHARGED STORED VOLTAGE. UNITS WITH VARIABLE SPEED DRIVE. REFER TO DRIVE INSTRUCTIONS FOR CAPACITOR DISCHARGE.

FAILURE TO DO THE ABOVE BEFORE SERVICING COULD RESULT IN DEATH OR SERIOUS INJURY.

⚠ AVERTISSEMENT
TENSION DANGEREUSE!

COUPER TOUTES LES TENSIONS ET OUVRIR LES SECTIONNEURS À DISTANCE. PUIS SUIVRE LES PROCÉDURES DE VERROUILLAGE ET DES ÉTIQUETTES AVANT TOUTE INTERVENTION. VÉRIFIER QUE TOUS LES CONDENSATEURS DES MOTEURS SONT DÉCHARGÉS. DANS LE CAS D'UNITÉS COMPORTANT DES ENTRAÎNEMENTS À VITESSE VARAIBLE, SE REPORTER AUX INSTRUCTIONS DE L'ENTRAÎNEMENT POUR DÉCHARGER LES CONDENSATEURS.

NE PAS RESPECTER CES MESURES DE PRÉCAUTION PEUT ENTRAÎNER DES BLESSURES GRAVES POUVANT ÊTRE MORTELLES.

⚠ ADVERTENCIA
¡VOLTAJE PELIGROSO!

DESCONECTE TODA LA ENERGÍA ELÉCTRICA, INCLUSO LAS DESCONEXIONES REMOTAS Y SIGA LOS PROCEDIMIENTOS DE CIERRE Y ETIQUETADO ANTES DE PROCEDER AL SERVICIO. ASEGÚRESE DE QUE TODOS LOS CAPACITORES DEL MOTOR HAYAN DESCARGADO EL VOLTAJE ALMACENADO. PARA LAS UNIDADES CON EJE DE DIRECCIÓN DE VELOCIDAD VARIABLE, CONSULTE LAS INSTRUCCIONES PARA LA DESCARGA DEL CONDENSADOR.

EL NO REALIZAR LO ANTERIORMENTE INDICADO, PODRÍA OCASIONAR LA MUERTE O SERIAS LESIONES PERSONALES.

CAUTION
USE COPPER CONDUCTORS ONLY!

UNIT TERMINALS ARE NOT DESIGNED TO ACCEPT OTHER TYPES OF CONDUCTORS.

FAILURE TO DO SO MAY CAUSE DAMAGE TO THE EQUIPMENT.

PRECAUCIÓN
N'UTILISER QUE DES CONDUCTEURS EN CUIVRE!

LES BORNES DE L'UNITÉ NE SONT PAS CONÇUES POUR RECEVOIR D'AUTRES TYPES DE CONDUCTEURS.

L'UTILISATION DE TOUT AUTRE CONDUCTEUR PEUT ENDOMMAGER L'ÉQUIPEMENT.

ATTENTION
¡UTILICE ÚNICAMENTE CONDUCTORES DE COBRE!

LAS TERMINALES DE LA UNIDAD NO ESTÁN DISEÑADAS PARA ACEPTAR OTROS TIPOS DE CONDUCTORES.

SI NO LO HACE, PUEDE OCASIONAR DAÑO AL EQUIPO.

PRINTED FROM 4367-0343 REV A

NAME:CLKLP OBJECT:4367_0343 DATE:16-Jan-07 08:27:45