UNLESS OTHERWISE SPECIFIED ALL DIMENSIONS ARE IN INCHES. TOLERANCE:

.X =± 0.1
.XX =± 0.03
.XXX =± 0.005

FINISH ✓

ANGLES =± 2.0 ° HOLE DIA = +/-

CONFORMS TO ASME Y14.5M-1994.

TRANE
A DIVISION OF AMERICAN STANDARD INC.
ALL RIGHTS RESERVED

THIS DRAWING IS PROPRIETARY AND SHALL NOT BE COPIED OR ITS CONTENTS DISCLOSED TO OUTSIDE PARTIES WITHOUT THE WRITTEN CONSENT OF TRANE

DRAWN BY: J.EATON © DATE: 27 Apr 06

DO NOT SCALE PRINT THIRD ANGLE PROJECTION

4367-0339 SHEET 1 OF 1 REV A

DIAGRAM, WIRING
SEE TABLE

MATERIAL:
FLEXCON WHITE VINYL (2 MIL THICK) WITH PRESSURE SENSITIVE ADHESIVE BACKING AND RELEASE PAPER. ADHESIVE FOR OUTDOOR APPLICATION ON PAINTED OR GALVANIZED METAL.
SIZE: 8-1/4 X 13
ALL PRINTING TO BE BLACK.
TRANE CO. TO FURNISH PRINTER WITH ELECTRONIC FILE OF THIS DRAWING IN THE PRINTER DESIRED FORMAT. WIRING DIAGRAMS TO BE SUPPLIED AS INDIVIDUAL SHEETS PER SIZE ABOVE.

WIRE COLOR DESIGNATION			
ABBR	COLOR	ABBR	COLOR
BK	BLACK	PR	PURPLE
BL	BLUE	RD	RED
BR	BROWN	WH	WHITE
GR	GREEN	YL	YELLOW
OR	ORANGE		

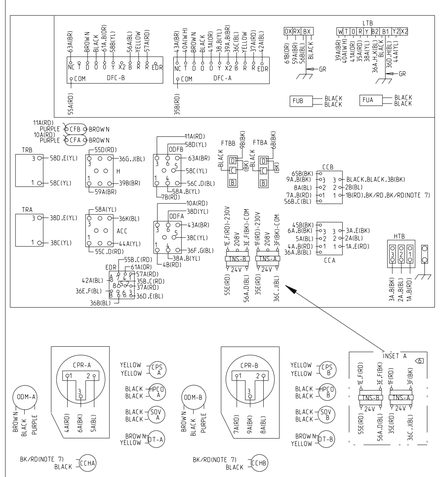

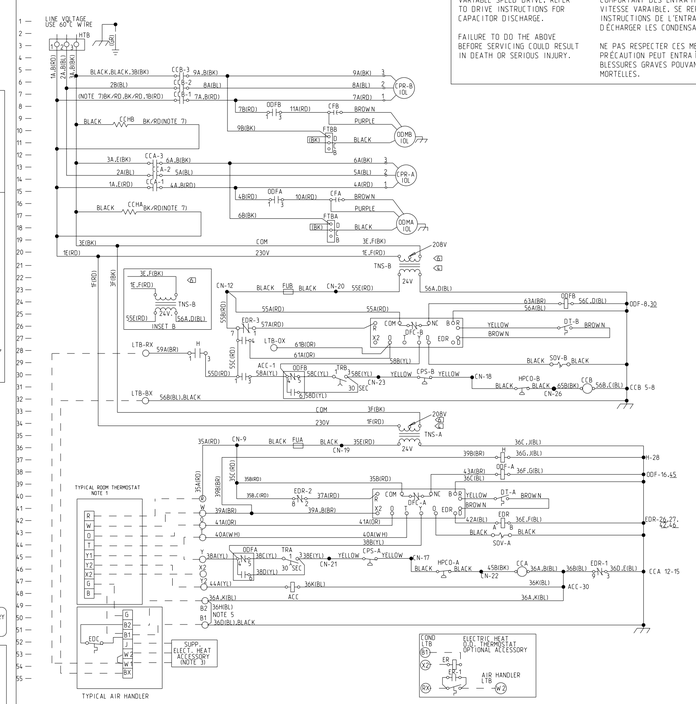

⚠ WARNING
HAZARDOUS VOLTAGE!

DISCONNECT ALL ELECTRIC POWER INCLUDING REMOTE DISCONNECTS AND FOLLOW LOCK OUT AND TAG PROCEDURES BEFORE SERVICING. INSURE THAT ALL MOTOR CAPACITORS HAVE DISCHARGED STORED VOLTAGE. UNITS WITH VARIABLE SPEED DRIVE, REFER TO DRIVE INSTRUCTIONS FOR CAPACITOR DISCHARGE.

FAILURE TO DO THE ABOVE BEFORE SERVICING COULD RESULT IN DEATH OR SERIOUS INJURY.

⚠ AVERTISSEMENT
TENSION DANGEREUSE!

COUPER TOUTES LES TENSIONS ET OUVRIR LES SECTIONNEURS À DISTANCE. PUIS SUIVRE LES PROCÉDURES DE VERROUILLAGE ET DES ÉTIQUETTES AVANT TOUTE INTERVENTION. VÉRIFIER QUE TOUS LES CONDENSATEURS DES MOTEURS SONT DÉCHARGÉS. DANS LE CAS D'UNITÉS COMPORTANT DES ENTRAÎNEMENTS À VITESSE VARIABLE, SE REPORTER AUX INSTRUCTIONS DE L'ENTRAÎNEMENT POUR DÉCHARGER LES CONDENSATEURS.

NE PAS RESPECTER CES MESURES DE PRÉCAUTION PEUT ENTRAÎNER DES BLESSURES GRAVES POUVANT ÊTRE MORTELLES.

⚠ ADVERTENCIA
¡VOLTAJE PELIGROSO!

DESCONECTE TODA LA ENERGÍA ELÉCTRICA, INCLUSO LAS DESCONEXIONES REMOTAS Y SIGA LOS PROCEDIMIENTOS DE CIERRE Y ETIQUETADO ANTES DE PROCEDER AL SERVICIO. ASEGÚRESE DE QUE TODOS LOS CAPACITORES DEL MOTOR HAYAN DESCARGADO EL VOLTAJE ALMACENADO. PARA LAS UNIDADES CON EJE DE DIRECCIÓN DE VELOCIDAD VARIABLE, CONSULTE LAS INSTRUCCIONES PARA LA DESCARGA DEL CONDENSADOR.

EL NO REALIZAR LO ANTERIORMENTE INDICADO, PODRÍA OCASIONAR LA MUERTE O SERIAS LESIONES PERSONALES.

CAUTION
USE COPPER CONDUCTORS ONLY!

UNIT TERMINALS ARE NOT DESIGNED TO ACCEPT OTHER TYPES OF CONDUCTORS.

FAILURE TO DO SO MAY CAUSE DAMAGE TO THE EQUIPMENT.

ATTENTION
N'UTILISER QUE DES CONDUCTEURS EN CUIVRE!

LES BORNES DE L'UNITÉ NE SONT PAS CONÇUES POUR RECEVOIR D'AUTRES TYPES DE CONDUCTEURS.

L'UTILISATION DE TOUT AUTRE CONDUCTEUR PEUT ENDOMMAGER L'ÉQUIPEMENT.

PRECAUCIÓN
¡UTILICE ÚNICAMENTE CONDUCTORES DE COBRE!

LAS TERMINALES DE LA UNIDAD NO ESTÁN DISEÑADAS PARA ACEPTAR OTROS TIPOS DE CONDUCTORES.

SI NO LO HACE, PUEDE OCASIONAR DAÑO AL EQUIPO.

DEVICE	DESCRIPTION	LINE
ACC	AUX. CRP. CONTACTOR	47
CC-	COMPRESSOR CONTACTOR	31.66
CCH-	CRANKCASE HEATER	9.17
CF-	OUTDOOR FAN CAPACITOR	8.75
CN	CONNECTOR OR WIRE NUT	
CPR-	COMPRESSOR	6.13
DFC-	DEFROST CONTROL	26.40
DT-	DEFROST TERMINATOR	26.40
EDC	EVAP. DEFROST CONTROL	52
EDR	EVAP. DEFROST RELAY	42
FU-	FUSE	23.36
FTB-	FAN TERMINAL BLOCK	10.18
H	AUX. HEATING RELAY	37
HPCO-	HIGH PRESSURE CUTOUT	31.46
HTB	HIGH VOLTAGE TERMINAL BLOCK	3
IOL	INTERNAL OVERLOAD	
LTB	LOW VOLTAGE TERMINAL BOARD	40-51
ODF-	OUTDOOR FAN RELAY	24.38
ODM-	OUTDOOR FAN MOTOR	10.18
CPS-	COMPRESSOR PROTECTION SWITCH	30.45
SOV-	SWITCHOVER VALVE	29.43
TNS-	CONTROL POWER TRANSFORMER	22.35
TRA/TRB	TIME DELAY RELAY	30.45

NOTES:
1. LOW VOLTAGE WIRING MUST BE 18 AWG MINIMUM.
2. MAXIMUM EXTERNAL LOW VOLTAGE LOAD 24 V.A.C. (DOES NOT INCLUDE ACCESSORIES)
   EXTA (TNSA) IS 1.6 AMPS
   EXTB (TNSB) IS 2.3 AMPS
3. SEE WIRING DIAGRAM WITH HEATER FOR DETAILS OF HEATER WIRING.
4. CONNECTIONS SHOWN ARE FOR 230V/60HZ/3PH. WHEN 208V/60HZ/3PH OPERATION IS REQUIRED:
   (A) AT TRANSFORMER "A" AND "B" REMOVE 1E.F(RD) WIRE FROM TRANSFORMERS AND CONNECT TO 208V. TERMINAL ON TRANSFORMER.
5. IF EVAPORATOR DEFROST CONTROL (EDC) IS USED, REMOVE JUMPER BETWEEN "B1" AND "B2".
6. CONNECTIONS FOR THE 230V/3PH/60HZ UNIT ARE SHOWN. FOR 400V, 460V, AND 575V UNITS, SEE TRANSFORMER CONNECTIONS IN INSETS "A" AND "B".
7. ON ALL NOTE 7 REFERENCES, LEAD COLOR IS BK/RD ON TWA155BD/TWA180B4 MODELS, BK/BR ON TWA180BW MODEL, AND BK/YL ON TWA180B3 MODEL.
8. DO NOT JUMPER COMPRESSOR PROTECTION SWITCH (CPS), OR THE HIGH PRESSURE CUT-OUT SWITCH (HPCO).

NOTE
THREE PHASE MOTOR(S) FACTORY WIRED IN THIS EQUIPMENT ROUTED TO UNDER REPAIR SINGLE PHASING CONDITIONS

TWA155BD
TWA180B3
TWA180B4
TWA180BW

4367-0339 REV A

PRINTED FROM 4367-0339 REV A

NAME:LAPCO OBJECT:4367_0339 DATE:19-Dec-06 11:02:01