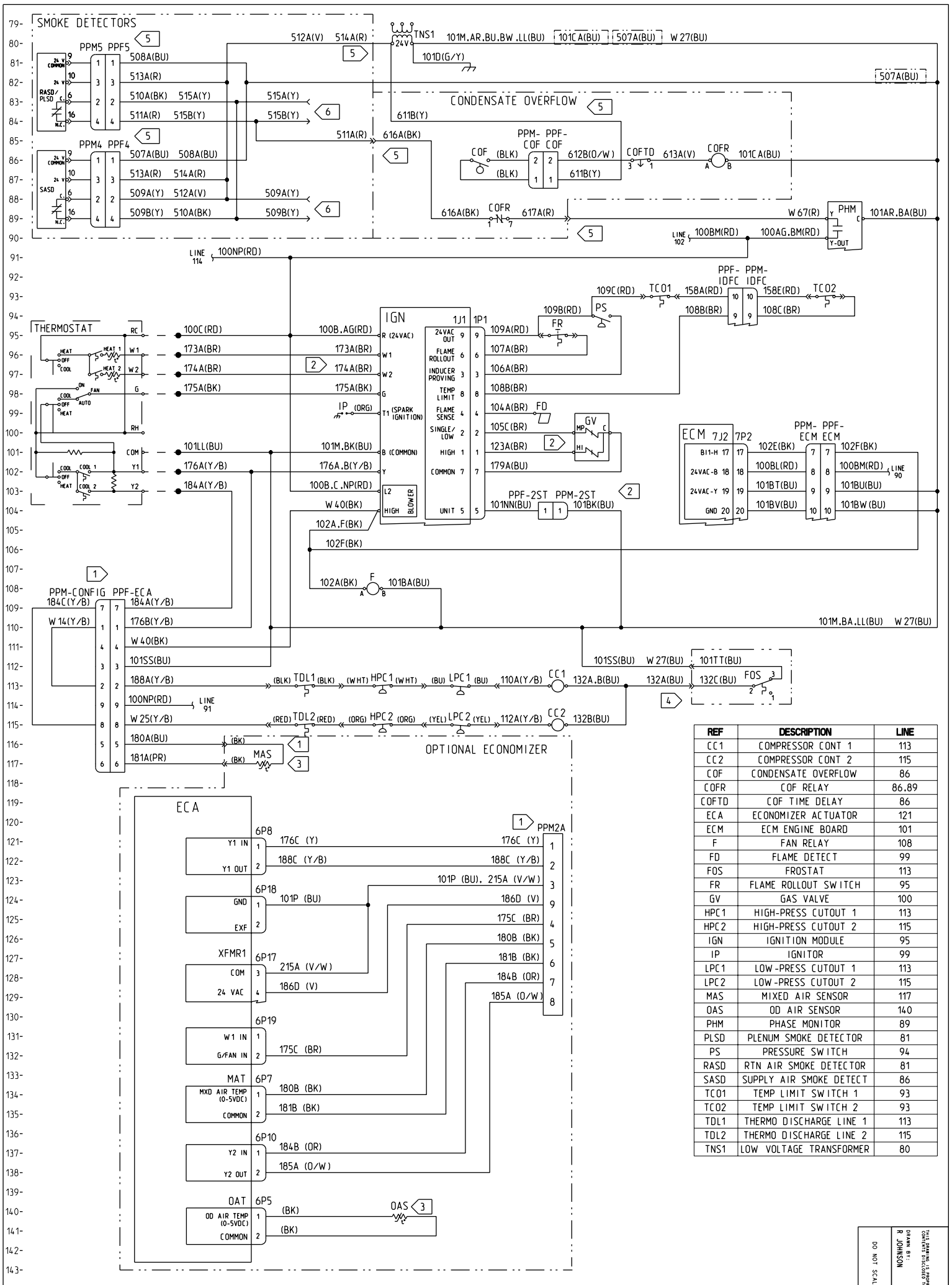

REF	DESCRIPTION	LINE
CC1	COMPRESSOR CONT 1	113
CC2	COMPRESSOR CONT 2	115
COF	CONDENSATE OVERFLOW	86
COFR	COF RELAY	86.89
COFTD	COF TIME DELAY	86
ECA	ECONOMIZER ACTUATOR	121
ECM	ECM ENGINE BOARD	101
F	FAN RELAY	108
FD	FLAME DETECT	99
FOS	FROSTAT	113
FR	FLAME ROLLOUT SWITCH	95
GV	GAS VALVE	100
HPC1	HIGH-PRESS CUTOUT 1	113
HPC2	HIGH-PRESS CUTOUT 2	115
IGN	IGNITION MODULE	95
IP	IGNITOR	99
LPC1	LOW-PRESS CUTOUT 1	113
LPC2	LOW-PRESS CUTOUT 2	115
MAS	MIXED AIR SENSOR	117
OAS	OD AIR SENSOR	140
PHM	PHASE MONITOR	89
PLSD	PLENUM SMOKE DETECTOR	81
PS	PRESSURE SWITCH	94
RASD	RTN AIR SMOKE DETECTOR	81
SASD	SUPPLY AIR SMOKE DETECT	86
TCO1	TEMP LIMIT SWITCH 1	93
TCO2	TEMP LIMIT SWITCH 2	93
TDL1	THERMO DISCHARGE LINE 1	113
TDL2	THERMO DISCHARGE LINE 2	115
TNS1	LOW VOLTAGE TRANSFORMER	80

NOTES:

1. TO INSTALL THE OPTIONAL ECONOMIZER, REMOVE PLUG PPM-CONFIG FROM PPF-ECA AND CONNECT PLUG PPM-ECA TO PPF-ECA. ALSO, CONNECT MAS TO WIRES 180A AND 181A.
2. CONNECTIONS SHOWN ARE FOR DUAL-STAGE GAS HEAT OPERATION. WHEN SINGLE-STAGE GAS HEAT OPERATION IS REQUIRED, REMOVE WIRE 174A FROM IGN. ALSO, REMOVE PLUG PPM-2ST FROM PPF-2ST. ALSO, REMOVE WIRE 123A FROM GV.
3. FOR MOTORIZED OUTSIDE AIR DAMPER, OPTIONAL MAS AND OAS (AND ASSOCIATED WIRING) ARE NOT USED.
4. CONNECTIONS SHOWN INCLUDE OPTIONAL FOS. IF FOS IS NOT INSTALLED, CONNECT WIRES 101SS AND W27 TO WIRE 132A.
5. CONNECTIONS SHOWN INCLUDE OPTIONAL SMOKE DETECTORS AND CONDENSATE OVERFLOW. IF ONLY SMOKE DETECTORS (RASD, SASD, OR PLSD) ARE INSTALLED, CONNECT 511A TO W67. IF ONLY CONDENSATE OVERFLOW IS INSTALLED, CONNECT 616A TO TNS1-24VAC. IF NEITHER OPTION IS INSTALLED, CONNECT W67 TO TNS1-24VAC.
6. CONNECTIONS SHOWN INCLUDE OPTIONAL SMOKE DETECTORS. THE FOLLOWING COMBINATIONS ARE ALLOWED: RASD ONLY, SASD ONLY, RASD & SASD, AND PLSD ONLY. IF RASD OR PLSD IS NOT INSTALLED, CONNECT WIRE 515A TO WIRE 515B. IF SASD IS NOT INSTALLED, CONNECT WIRE 509A TO WIRE 509B.

THIS DRAWING IS PROPRIETARY AND SHALL NOT BE COPIED OR ITS CONTENTS DISCLOSED WITHOUT THE WRITTEN CONSENT OF TRANE

DRAWN BY: R. JOHNSON

© TRANE

DATE: 6/6/2013

DO NOT SCALE PRINT

THIRD ANGLE PROJECTION

4366-8388

CONTROLS DIAGRAM
YSC120F
THC(092,102)F
EM CONTROLS

SHEET 1 OF 1

REV A