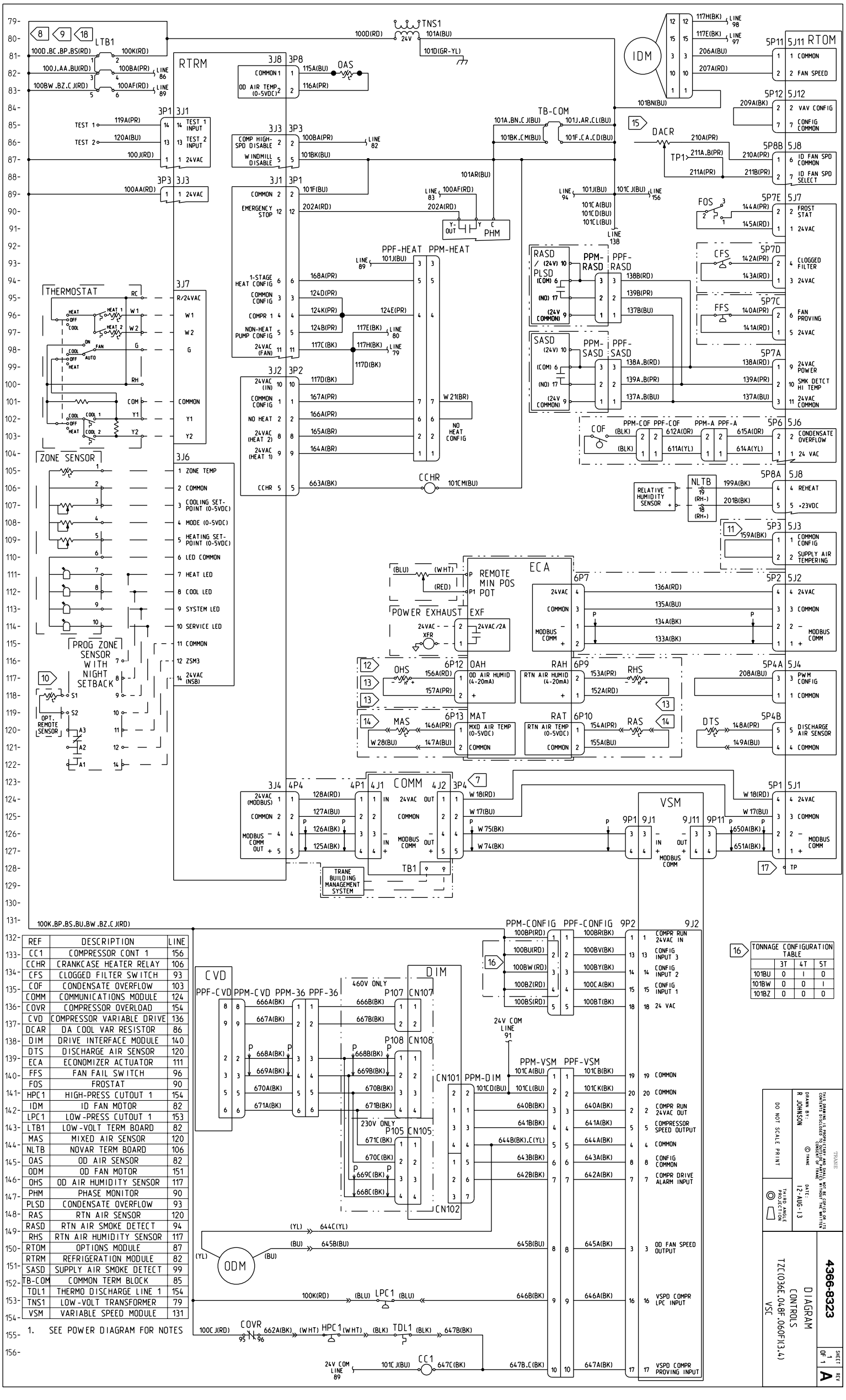

REF	DESCRIPTION	LINE
CC1	COMPRESSOR CONT 1	156
CCHR	CRANKCASE HEATER RELAY	106
CFS	CLOGGED FILTER SWITCH	93
COF	CONDENSATE OVERFLOW	103
COMM	COMMUNICATIONS MODULE	124
COVR	COMPRESSOR OVERLOAD	154
CVD	COMPRESSOR VARIABLE DRIVE	136
DCAR	DA COOL VAR RESISTOR	86
DIM	DRIVE INTERFACE MODULE	140
DTS	DISCHARGE AIR SENSOR	120
ECA	ECONOMIZER ACTUATOR	111
FFS	FAN FAIL SWITCH	96
FOS	FROSTAT	90
HPC1	HIGH-PRESS CUTOUT 1	154
IDM	ID FAN MOTOR	82
LPC1	LOW-PRESS CUTOUT 1	153
LTB1	LOW-VOLT TERM BOARD	82
MAS	MIXED AIR SENSOR	120
NLTB	NOVAR TERM BOARD	106
OAS	OD AIR SENSOR	82
ODM	OD FAN MOTOR	151
OHS	OD AIR HUMIDITY SENSOR	117
PHM	PHASE MONITOR	90
PLSD	CONDENSATE OVERFLOW	93
RAS	RTN AIR SENSOR	120
RASD	RTN AIR SMOKE DETECT	94
RHS	RTN AIR HUMIDITY SENSOR	117
RTOM	OPTIONS MODULE	87
RTRM	REFRIGERATION MODULE	82
SASD	SUPPLY AIR SMOKE DETECT	99
TB-COM	COMMON TERM BLOCK	85
TDL1	THERMO DISCHARGE LINE 1	154
TNS1	LOW-VOLT TRANSFORMER	79
VSM	VARIABLE SPEED MODULE	131

1. SEE POWER DIAGRAM FOR NOTES

TONNAGE CONFIGURATION TABLE

	3T	4T	5T
101BU	0	1	0
101BW	0	0	1
101BZ	0	0	0

DO NOT SCALE PRINT

THIRD ANGLE PROJECTION

DRAWN BY: R. JOHNSON

DATE: 12-AUG-13

THIS DRAWING IS PROPRIETARY AND SHALL NOT BE COPIED OR ITS CONTENTS DISCLOSED WITHOUT THE WRITTEN CONSENT OF TRANE © TRANE

TRANE

4366-8323

DIAGRAM CONTROLS TZC(036E.048F.060F)(3.4) VSC

SHEET 1 OF 1

REV A