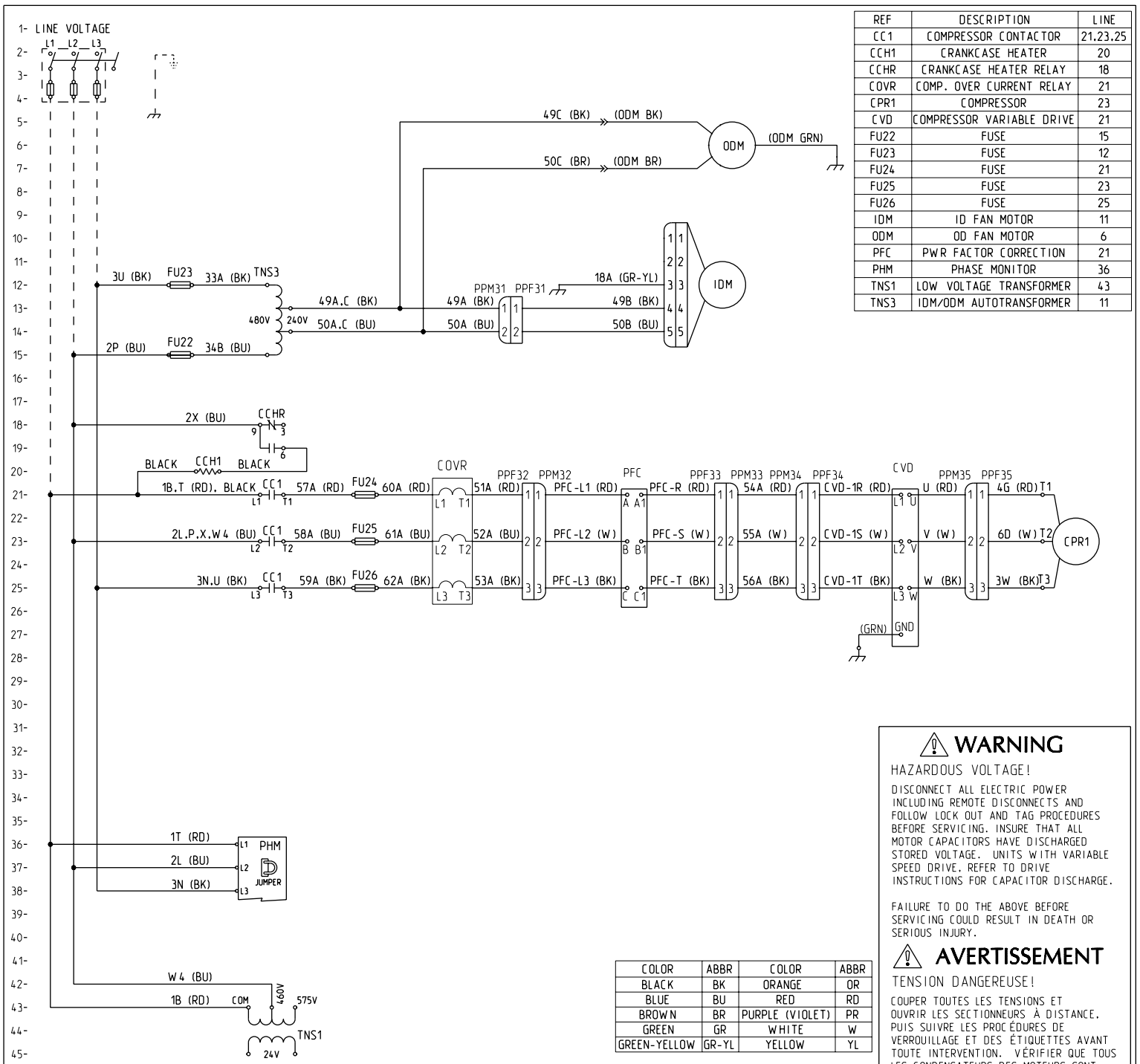

REF	DESCRIPTION	LINE
CC1	COMPRESSOR CONTACTOR	21.23.25
CCH1	CRANKCASE HEATER	20
CCHR	CRANKCASE HEATER RELAY	18
COVR	COMP. OVER CURRENT RELAY	21
CPR1	COMPRESSOR	23
CVD	COMPRESSOR VARIABLE DRIVE	21
FU22	FUSE	15
FU23	FUSE	12
FU24	FUSE	21
FU25	FUSE	23
FU26	FUSE	25
IDM	ID FAN MOTOR	11
ODM	OD FAN MOTOR	6
PFC	PWR FACTOR CORRECTION	21
PHM	PHASE MONITOR	36
TNS1	LOW VOLTAGE TRANSFORMER	43
TNS3	IDM/ODM AUTOTRANSFORMER	11

COLOR	ABBR	COLOR	ABBR
BLACK	BK	ORANGE	OR
BLUE	BU	RED	RD
BROWN	BR	PURPLE (VIOLET)	PR
GREEN	GR	WHITE	W
GREEN-YELLOW	GR-YL	YELLOW	YL

1. UNLESS OTHERWISE NOTED, ALL SWITCHES ARE SHOWN AT 25°C (77°F), AT ATMOSPHERIC PRESSURE, AT 50% RELATIVE HUMIDITY WITH ALL UTILITIES TURNED OFF AND AFTER A NORMAL SHUTDOWN HAS OCCURRED.
2. DASHED LINES INDICATE RECOMMENDED FIELD WIRING BY OTHERS. DASHED LINE ENCLOSURES AND/OR DASHED DEVICE OUTLINES INDICATE COMPONENTS PROVIDED BY THE FIELD. PHANTOM LINE ENCLOSURES INDICATE ALTERNATE CIRCUITRY OR AVAILABLE SALES OPTIONS.
3. NUMBERS ALONG THE RIGHT SIDE OF THE SCHEMATIC DESIGNATE THE LOCATION OF CONTACTS BY LINE NUMBER. AN UNDERLINED NUMBER INDICATES A NORMALLY CLOSED CONTACT.
4. THREE PHASE MOTORS ARE PROTECTED UNDER PRIMARY SINGLE PHASING CONDITIONS. ALL MOTORS HAVE INTERNAL OVERLOAD PROTECTION. COMPRESSORS HAVE INTERNAL THERMAL PROTECTION.
5. IF ANY OF THE ORIGINAL WIRES, AS SUPPLIED WITH THIS UNIT, MUST BE REPLACED, REPLACE WITH APPLIANCE WIRING MATERIAL RATED AT 105°C.

8 CONNECTIONS SHOWN INCLUDE OPTIONAL COMM. IF COMM IS NOT INSTALLED, CONNECT PLUG 3P4 TO RTRM-3J4. REFER TO ACCOMPANYING LITERATURE FOR PROPER CONNECTION/COMBINATION OF OPTIONAL COMPONENTS.

9 TO DISABLE THE COMPRESSOR, REMOVE THE JUMPER ON LTB1 BETWEEN PINS 1 & 2 AND CONNECT FIELD SUPPLIED CONTROL DEVICE.

10 TO SHUT DOWN THE UNIT FOR EMERGENCY STOP, REMOVE THE JUMPERS ON LTB1 BETWEEN PINS 5 & 6 AND CONNECT FIELD SUPPLIED CONTROL DEVICE OR INSTALL OPTIONAL FIRESTAT.

11 INSTALL OPTIONAL REMOTE SENSOR TO PINS S1 & S2 WHEN REQUIRED. SEE PROGRAMMABLE ZONE SENSOR/REMOTE PANEL WITH NIGHT SETBACK LITERATURE FOR CORRECT SETTINGS.

12 TO ENABLE SUPPLY AIR TEMPERING, REMOVE PLUG 5P3.

13 REQUIRED FOR OPTIONAL REFERENCE ENTHALPY CONTROL.

14 REQUIRED FOR OPTIONAL COMPARATIVE ENTHALPY CONTROL.

15 OPTIONAL MAS, RAS, RHS, OHS, AND ASSOCIATED WIRING ARE NOT USED WITH MOTORIZED OUTSIDE AIR DAMPER.

16 IDM RPM INDICATON 0-2.4V ACROSS TP1 AND GROUND.

17 REFERENCE TONNAGE CONFIGURATION TABLE. 1 = WIRE CONNECTED TO 24VAC & 0 = WIRE NOT CONNECTED.

18 DISCHARGE AIR COOL SETPOINT INDICATION 0-2.4V ACROSS TEST POINT (TP) AND GROUND.

19 TO PREVENT FULL LOAD OPERATION OF VARIABLE LOAD COMPRESSOR, REMOVE JUMPER ON LTB1 BETWEEN PINS 3 & 4.

20 TNS1 MAY OCCASIONALLY BE INSTALLED ROTATED 180 DEGREES FROM THE ORIENTATION SHOWN. THE BREAKER ON TNS1 SHOULD ALWAYS BE FACING THE FRONT OF THE UNIT.

21 NLTB AND ASSOCIATED WIRING IS ALSO INCLUDED IN ENHANCED DEHUMIDIFICATION, AND IS STANDARD EQUIPMENT ON THIS UNIT.

⚠ WARNING

HAZARDOUS VOLTAGE!

DISCONNECT ALL ELECTRIC POWER INCLUDING REMOTE DISCONNECTS AND FOLLOW LOCK OUT AND TAG PROCEDURES BEFORE SERVICING. INSURE THAT ALL MOTOR CAPACITORS HAVE DISCHARGED STORED VOLTAGE. UNITS WITH VARIABLE SPEED DRIVE, REFER TO DRIVE INSTRUCTIONS FOR CAPACITOR DISCHARGE.

FAILURE TO DO THE ABOVE BEFORE SERVICING COULD RESULT IN DEATH OR SERIOUS INJURY.

⚠ AVERTISSEMENT

TENSION DANGEREUSE!

COUPER TOUTES LES TENSIONS ET OUVRIR LES SECTIONNEURS À DISTANCE, PUIS SUIVRE LES PROCÉDURES DE VERROUILLAGE ET DES ÉTIQUETTES AVANT TOUTE INTERVENTION. VÉRIFIER QUE TOUS LES CONDENSATEURS DES MOTEURS SONT DÉCHARGÉS. DANS LE CAS D'UNITÉS COMPORTANT DES ENTRAÎNEMENTS À VITESSE VARAIBLE, SE REPORTER AUX INSTRUCTIONS DE L'ENTRAÎNEMENT POUR DÉCHARGER LES CONDENSATEURS.

NE PAS RESPECTER CES MESURES DE PRÉCAUTION PEUT ENTRAÎNER DES BLESSURES GRAVES POUVANT ÊTRE MORTELLES.

⚠ ADVERTENCIA

¡VOLTAJE PELIGROSO!

DESCONECTE TODA LA ENERGÍA ELÉCTRICA, INCLUSO LAS DESCONEXIONES REMOTAS Y SIGA LOS PROCEDIMIENTOS DE CIERRE Y ETIQUETADO ANTES DE PROCEDER AL SERVICIO. ASEGÚRESE DE QUE TODOS LOS CAPACITORES DEL MOTOR HAYAN DESCARGADO EL VOLTAJE ALMACENADO. PARA LAS UNIDADES CON EJE DE DIRECCIÓN DE VELOCIDAD VARIABLE, CONSULTE LAS INSTRUCCIONES PARA LA DESCARGA DEL CONDENSADOR.

EL NO REALIZAR LO ANTERIORMENTE INDICADO, PODRÍA OCASIONAR LA MUERTE O SERIAS LESIONES PERSONALES.

CAUTION

USE COPPER CONDUCTORS ONLY!

UNIT TERMINALS ARE NOT DESIGNED TO ACCEPT OTHER TYPES OF CONDUCTORS.

FAILURE TO DO SO MAY CAUSE DAMAGE TO THE EQUIPMENT.

ATTENTION

N'UTILISER QUE DES CONDUCTEURS EN CUIVRE!

LES BORNES DE L'UNITÉ NE SONT PAS CONÇUES POUR RECEVOIR D'AUTRES TYPES DE CONDUCTEURS.

L'UTILISATION DE TOUT AUTRE CONDUCTEUR PEUT ENDOMMAGER L'ÉQUIPEMENT.

PRECAUCIÓN

¡UTILICE ÚNICAMENTE CONDUCTORES DE COBRE!

LAS TERMINALES DE LA UNIDAD NO ESTÁN DISEÑADAS PARA ACEPTAR OTROS TIPOS DE CONDUCTORES.

SI NO LO HACE, PUEDE OCASIONAR DAÑO AL EQUIPO.

IMPORTANT

DO NOT ENERGIZE UNIT UNTIL CHECK-OUT AND START-UP PROCEDURE HAS BEEN COMPLETED.

DO NOT SCALE PRINT

THIRD ANGLE PROJECTION

DRAWN BY: P. NICHOLS

DATE: 3-MAY-2013

TRANE
THIS DRAWING IS PROPRIETARY AND SHALL NOT BE COPIED OR ITS CONTENTS DISCLOSED TO ANY OTHER PARTY WITHOUT THE WRITTEN CONSENT OF TRANE.
© TRANE

ULTRA HIGH EFF.-VAR. SPEED COMP.

TZC1036E-048F-060E14

DIAGRAM POWER

4366-8315

SHEET 1 OF 1

REV A