Release on 3/13/20

1. ALL WIRING AND DEVICES SHOWN DASHED TO BE SUPPLIED AND INSTALLED BY THE CUSTOMER IN ACCORDANCE WITH LOCAL AND NATIONAL ELECTRICAL CODES. PHANTOM LINE ENCLOSURES INDICATE ALTERNATE CIRCUITRY OR AVAILABLE SALES OPTIONS.
2. IF ANY OF THE ORIGINAL WIRES, AS SUPPLIED WITH THIS UNIT, MUST BE REPLACED, REPLACE WITH APPLIANCE WIRING MATERIAL RATED AT 105°C.
3. THREE PHASE MOTORS ARE PROTECTED UNDER PRIMARY SINGLE PHASING CONDITIONS. ALL MOTORS HAVE INTERNAL OVERLOAD PROTECTION. COMPRESSORS HAVE INTERNAL THERMAL PROTECTION.
4. CONNECTIONS SHOWN ARE FOR 230V/60HZ/3PH UNITS. WHEN 208V/60HZ/3PH OPERATION IS REQUIRED, MOVE WIRE W4 FROM THE 230V TERMINAL ON TNS1 TO THE 208V TERMINAL.
5. CONNECTIONS SHOWN INCLUDE OPTIONAL COMM. IF COMM IS NOT INSTALLED, CONNECT PLUG 3P4 TO RTRM-3J4. REFER TO ACCOMPANYING LITERATURE FOR PROPER CONNECTION/COMBINATION OF OPTIONAL COMPONENTS.
6. TO DISABLE THE COMPRESSOR, REMOVE THE JUMPERS ON LTB1 BETWEEN PINS 1 & 2 AND CONNECT FIELD SUPPLIED CONTROL DEVICE.
7. TO SHUT DOWN THE UNIT FOR EMERGENCY STOP, REMOVE THE JUMPER ON LTB1 BETWEEN PINS 5 & 6 AND CONNECT FIELD SUPPLIED CONTROL DEVICE OR INSTALL OPTIONAL FIRESTAT.
8. INSTALL OPTIONAL REMOTE SENSOR (NOT SHOWN) TO PINS S1 AND S2 (NOT SHOWN) WHEN REQUIRED. SEE PROGRAMMABLE ZONE SENSOR/REMOTE PANEL WITH NIGHT SETBACK LITERATURE FOR CORRECT SETTINGS.
9. TO ENABLE SUPPLY AIR TEMPERING, REMOVE PLUG 5P3.
10. REQUIRED FOR OPTIONAL REFERENCE ENTHALPY CONTROL.
11. REQUIRED FOR OPTIONAL COMPARATIVE ENTHALPY CONTROL.
12. TNS1 MAY OCCASIONALLY BE INSTALLED ROTATED 180 DEGREES FROM THE ORIENTATION SHOWN. THE BREAKER ON TNS1 SHOULD ALWAYS BE FACING THE FRONT OF THE UNIT.
13. TO PREVENT FULL LOAD OPERATION OF VARIABLE LOAD COMPRESSOR, REMOVE JUMPER ON LTB1 BETWEEN PINS 3 & 4.
14. FUTURE CHANGES - NOT USED.
15. IDM RPM INDICATION 0-2.4V ACROSS TP1 AND GROUND.
16. FOR VAV BOX RELAY (VHR) NORMALLY CLOSED FUNCTION, CONNECT TO WIRES 634A(PR) AND 635A(BK). FOR NORMALLY OPEN RELAY FUNCTION, CONNECT TO WIRES 635A(BK) AND 636A(YL).

**⚠ WARNING**
HAZARDOUS VOLTAGE!
DISCONNECT ALL ELECTRIC POWER INCLUDING REMOTE DISCONNECTS AND FOLLOW LOCK OUT AND TAG PROCEDURES BEFORE SERVICING. INSURE THAT ALL MOTOR CAPACITORS HAVE DISCHARGED STORED VOLTAGE. UNITS WITH VARIABLE SPEED DRIVE, REFER TO DRIVE INSTRUCTIONS FOR CAPACITOR DISCHARGE.
FAILURE TO DO THE ABOVE BEFORE SERVICING COULD RESULT IN DEATH OR SERIOUS INJURY.

**⚠ AVERTISSEMENT**
TENSION DANGEREUSE!
COUPER TOUTES LES TENSIONS ET OUVRIR LES SECTIONNEURS À DISTANCE. PUIS SUIVRE LES PROCÉDURES DE VERROUILLAGE ET DES ÉTIQUETTES AVANT TOUTE INTERVENTION. VÉRIFIER QUE TOUS LES CONDENSATEURS DES MOTEURS SONT DÉCHARGÉS. DANS LE CAS D'UNITÉS COMPORTANT DES ENTRAÎNEMENTS À VITESSE VARIABLE, SE REPORTER AUX INSTRUCTIONS DE L'ENTRAÎNEMENT POUR DÉCHARGER LES CONDENSATEURS.
NE PAS RESPECTER CES MESURES DE PRÉCAUTION PEUT ENTRAÎNER DES BLESSURES GRAVES POUVANT ÊTRE MORTELLES.

**⚠ ADVERTENCIA**
¡VOLTAJE PELIGROSO!
DESCONECTE TODA LA ENERGÍA ELÉCTRICA, INCLUSO LAS DESCONEXIONES REMOTAS Y SIGA LOS PROCEDIMIENTOS DE CIERRE Y ETIQUETADO ANTES DE PROCEDER AL SERVICIO. ASEGÚRESE DE QUE TODOS LOS CAPACITORES DEL MOTOR HAYAN DESCARGADO EL VOLTAJE ALMACENADO. PARA LAS UNIDADES CON EJE DE DIRECCIÓN DE VELOCIDAD VARIABLE, CONSULTE LAS INSTRUCCIONES PARA LA DESCARGA DEL CONDENSADOR.
EL NO REALIZAR LO ANTERIORMENTE INDICADO, PODRÍA OCASIONAR LA MUERTE O SERIAS LESIONES PERSONALES.

**TRANE**
THIS DRAWING IS PROPRIETARY AND SHALL NOT BE COPIED OR ITS CONTENTS DISCLOSED TO OUTSIDE PARTIES WITHOUT THE WRITTEN CONSENT OF TRANE © TRANE
DRAWN BY: K. EDWARDS
DATE: 3/06/13
DO NOT SCALE PRINT
THIRD ANGLE PROJECTION

**4366-8245** REV **A**

DIAGRAM
CONNECTION PRINT
THC(047,067)E3 - 17 SEER
WITH MULTI-ZONE VAV

**IMPORTANT**
DO NOT ENERGIZE UNIT UNTIL CHECK-OUT AND START-UP PROCEDURE HAS BEEN COMPLETED.

**CAUTION**
USE COPPER CONDUCTORS ONLY!
UNIT TERMINALS ARE NOT DESIGNED TO ACCEPT OTHER TYPES OF CONDUCTORS.
FAILURE TO DO SO MAY CAUSE DAMAGE TO THE EQUIPMENT.

**ATTENTION**
N'UTILISER QUE DES CONDUCTEURS EN CUIVRE!
LES BORNES DE L'UNITÉ NE SONT PAS CONÇUES POUR RECEVOIR D'AUTRES TYPES DE CONDUCTEURS.
L'UTILISATION DE TOUT AUTRE CONDUCTEUR PEUT ENDOMMAGER L'ÉQUIPEMENT.
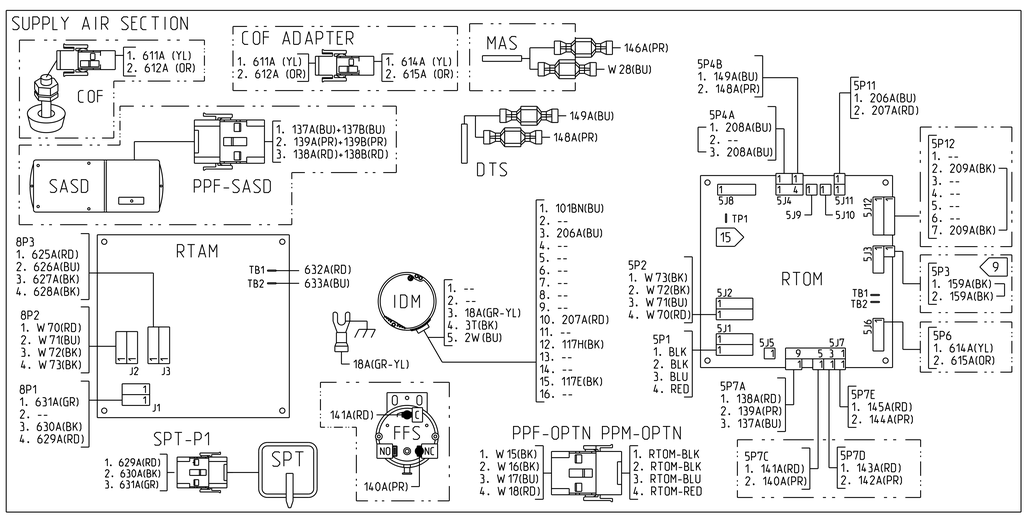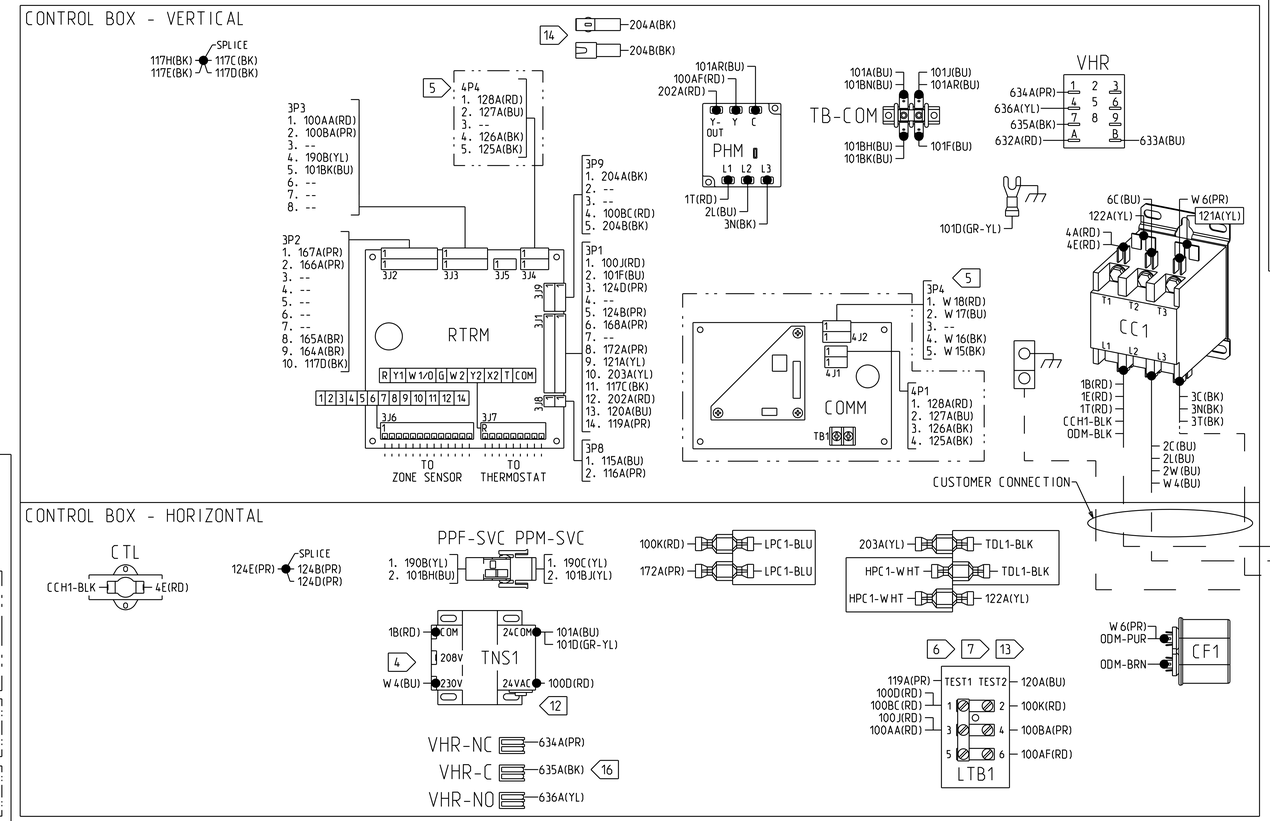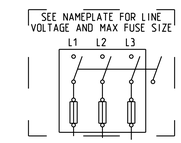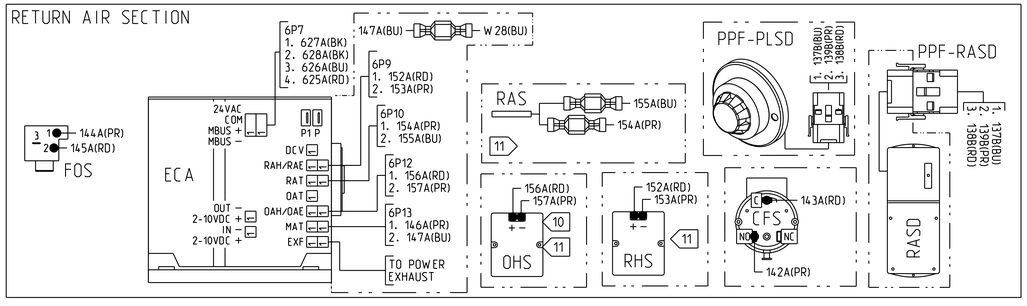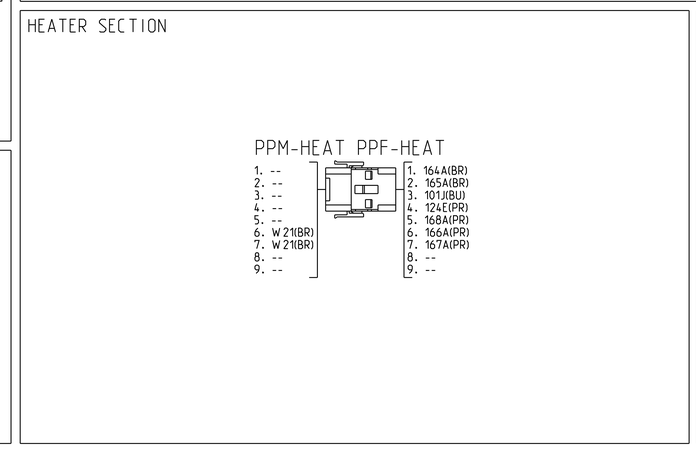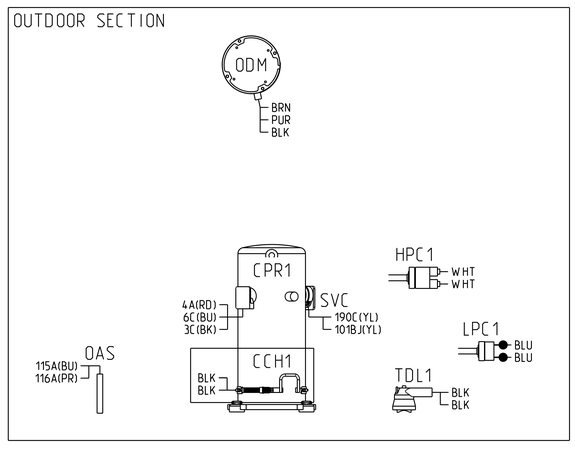
**PRECAUCIÓN**
¡UTILICE ÚNICAMENTE CONDUCTORES DE COBRE!
LAS TERMINALES DE LA UNIDAD NO ESTÁN DISEÑADAS PARA ACEPTAR OTROS TIPOS DE CONDUCTORES.
SI NO LO HACE, PUEDE OCASIONAR DAÑO AL EQUIPO.