1. ALL WIRING AND DEVICES SHOWN DASHED TO BE SUPPLIED AND INSTALLED BY THE CUSTOMER IN ACCORDANCE WITH LOCAL AND NATIONAL ELECTRICAL CODES. PHANTOM LINE ENCLOSURES INDICATE ALTERNATE CIRCUITRY OR AVAILABLE SALES OPTIONS.
2. IF ANY OF THE ORIGINAL WIRES, AS SUPPLIED WITH THIS UNIT, MUST BE REPLACED, REPLACE WITH APPLIANCE WIRING MATERIAL RATED AT 105°C.
3. THREE PHASE MOTORS ARE PROTECTED UNDER PRIMARY SINGLE PHASING CONDITIONS. ALL MOTORS HAVE INTERNAL OVERLOAD PROTECTION. COMPRESSORS HAVE INTERNAL THERMAL PROTECTION.
4. CONNECTIONS SHOWN ARE FOR DUAL-STAGE GAS HEAT OPERATION. IF SINGLE-STAGE OPERATION IS REQUIRED, WIRE 21A IS NOT CONNECTED TO IGN, AND WIRE IND-PUR IS NOT PRESENT.
5. CONNECTIONS SHOWN INCLUDE OPTIONAL COMM. IF COMM IS NOT INSTALLED, CONNECT PLUG 3P4 TO RTRM-3J4. REFER TO ACCOMPANYING LITERATURE FOR PROPER CONNECTION/COMBINATION OF OPTIONAL COMPONENETS.
6. TO DISABLE THE COMPRESSOR, REMOVE THE JUMPERS ON LTB1 BETWEEN PINS 1 & 2 AND CONNECT FIELD SUPPLIED CONTROL DEVICE.
7. TO SHUT DOWN THE UNIT FOR EMERGENCY STOP, REMOVE THE JUMPER ON LTB1 BETWEEN PINS 5 & 6 AND CONNECT FIELD SUPPLIED CONTROL DEVICE OR INSTALL OPTIONAL FIRESTAT.
8. INSTALL OPTIONAL REMOTE SENSOR (NOT SHOWN) TO PINS S1 AND S2 (NOT SHOWN) WHEN REQUIRED. SEE PROGRAMMABLE ZONE SENSOR/REMOTE PANEL WITH NIGHT SETBACK LITERATURE FOR CORRECT SETTINGS.
9. TO ENABEL SUPPLY AIR TEMPERING, REMOVE PLUG 5P3.
10. REQUIRED FOR OPTIONAL REFERENCE ENTHALPY CONTROL.
11. REQUIRED FOR OPTIONAL COMPARATIVE ENTHALPY CONTROL.
12. OPTIONAL MAS, RAS, RHS, OHS, AND ASSOCIATED WIRING ARE NOT USED WITH MOTORIZED OUTSIDE AIR DAMPER.
13. TNS1 MAY OCCASIONALLY BE INSTALLED ROTATED 180 DEGREES FROM THE ORIENTATION SHOWN. THE BREAKER ON TNS1 SHOULD ALWAYS BE FACING THE FRONT OF THE UNIT.
14. TO PREVENT FULL LOAD OPERATION OF VARIABLE LOAD COMPRESSOR, REMOVE JUMPER ON LTB1 BETWEEN PINS 3 & 4.
15. FUTURE CHANGES - NOT USED.
16. IF DEHUMIDIFICATION OPTION IS INSTALLED, CUT AND ISOLATE WIRE 124G.
17. REQUIRED FOR OPTIONAL DEHUMIDIFICATION. SEE CO2 SENSOR & VENTILATION OVERRIDE ACCESSORY DIAGRAM FOR ADDITIONAL WIRING.
18. NLTB AND ASSOCIATED WIRING IS ALSO INCLUDED IN ENHANCED DEHUMIDIFICATION, AND IS STANDARD EQUIPMENT ON THIS UNIT.
19. IDM RPM INDICATION 0-2.4V ACROSS TP1 AND GROUND.
20. DISCHARGE AIR COOL SETPOINT INDICATION 0-2.4V ACROSS TEST POINT (TP) AND GROUND.

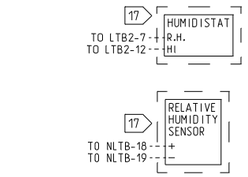

⚠ WARNING

HAZARDOUS VOLTAGE!

DISCONNECT ALL ELECTRIC POWER INCLUDING REMOTE DISCONNECTS AND FOLLOW LOCK OUT AND TAG PROCEDURES BEFORE SERVICING. INSURE THAT ALL MOTOR CAPACITORS HAVE DISCHARGED STORED VOLTAGE. UNITS WITH VARIABLE SPEED DRIVE, REFER TO DRIVE INSTRUCTIONS FOR CAPACITOR DISCHARGE.

FAILURE TO DO THE ABOVE BEFORE SERVICING COULD RESULT IN DEATH OR SERIOUS INJURY.

⚠ AVERTISSEMENT

TENSION DANGEREUSE!

COUPER TOUTES LES TENSIONS ET OUVRIR LES SECTIONNEURS À DISTANCE, PUIS SUIVRE LES PROCÉDURES DE VERROUILLAGE ET DES ÉTIQUETTES AVANT TOUTE INTERVENTION. VÉRIFIER QUE TOUS LES CONDENSATEURS DES MOTEURS SONT DÉCHARGÉS. DANS LE CAS D'UNITÉS COMPORTANT DES ENTRAÎNEMENTS À VITESSE VARIABLE, SE REPORTER AUX INSTRUCTIONS DE L'ENTRAÎNEMENT POUR DÉCHARGER LES CONDENSATEURS.

NE PAS RESPECTER CES MESURES DE PRÉCAUTION PEUT ENTRAÎNER DES BLESSURES GRAVES POUVANT ÊTRE MORTELLES.

⚠ ADVERTENCIA

¡VOLTAJE PELIGROSO!

DESCONECTE TODA LA ENERGÍA ELÉCTRICA, INCLUSO LAS DESCONEXIONES REMOTAS Y SIGA LOS PROCEDIMIENTOS DE CIERRE Y ETIQUETADO ANTES DE PROCEDER AL SERVICIO. ASEGÚRESE DE QUE TODOS LOS CAPACITORES DEL MOTOR HAYAN DESCARGADO EL VOLTAJE ALMACENADO. PARA LAS UNIDADES CON EJE DE DIRECCIÓN DE VELOCIDAD VARIABLE, CONSULTE LAS INSTRUCCIONES PARA LA DESCARGA DEL CONDENSADOR.

EL NO REALIZAR LO ANTERIORMENTE INDICADO, PODRÍA OCASIONAR LA MUERTE O SERIAS LESIONES PERSONALES.

TRANE

THIS DRAWING IS PROPRIETARY AND SHALL NOT BE COPIED OR ITS CONTENTS DISCLOSED TO OUTSIDE PARTIES WITHOUT THE WRITTEN CONSENT OF TRANE

DRAWN BY: J.Woosley © TRANE DATE: 06Apr2011

DO NOT SCALE PRINT — THIRD ANGLE PROJECTION

4366-7340 REV **C**

DIAGRAM
CONNECTION PRINT
YHC037E3
17-SEER

IMPORTANT

DO NOT ENERGIZE UNIT UNTIL CHECK-OUT AND START-UP PROCEDURE HAS BEEN COMPLETED.

CAUTION

USE COPPER CONDUCTORS ONLY!

UNIT TERMINALS ARE NOT DESIGNED TO ACCEPT OTHER TYPES OF CONDUCTORS.

FAILURE TO DO SO MAY CAUSE DAMAGE TO THE EQUIPMENT.

ATTENTION

N'UTILISER QUE DES CONDUCTEURS EN CUIVRE!

LES BORNES DE L'UNITÉ NE SONT PAS CONÇUES POUR RECEVOIR D'AUTRES TYPES DE CONDUCTEURS.

L'UTILISATION DE TOUT AUTRE CONDUCTEUR PEUT ENDOMMAGER L'ÉQUIPEMENT.

PRECAUCIÓN

¡UTILICE ÚNICAMENTE CONDUCTORES DE COBRE!

LAS TERMINALES DE LA UNIDAD NO ESTÁN DISEÑADAS PARA ACEPTAR OTROS TIPOS DE CONDUCTORES.
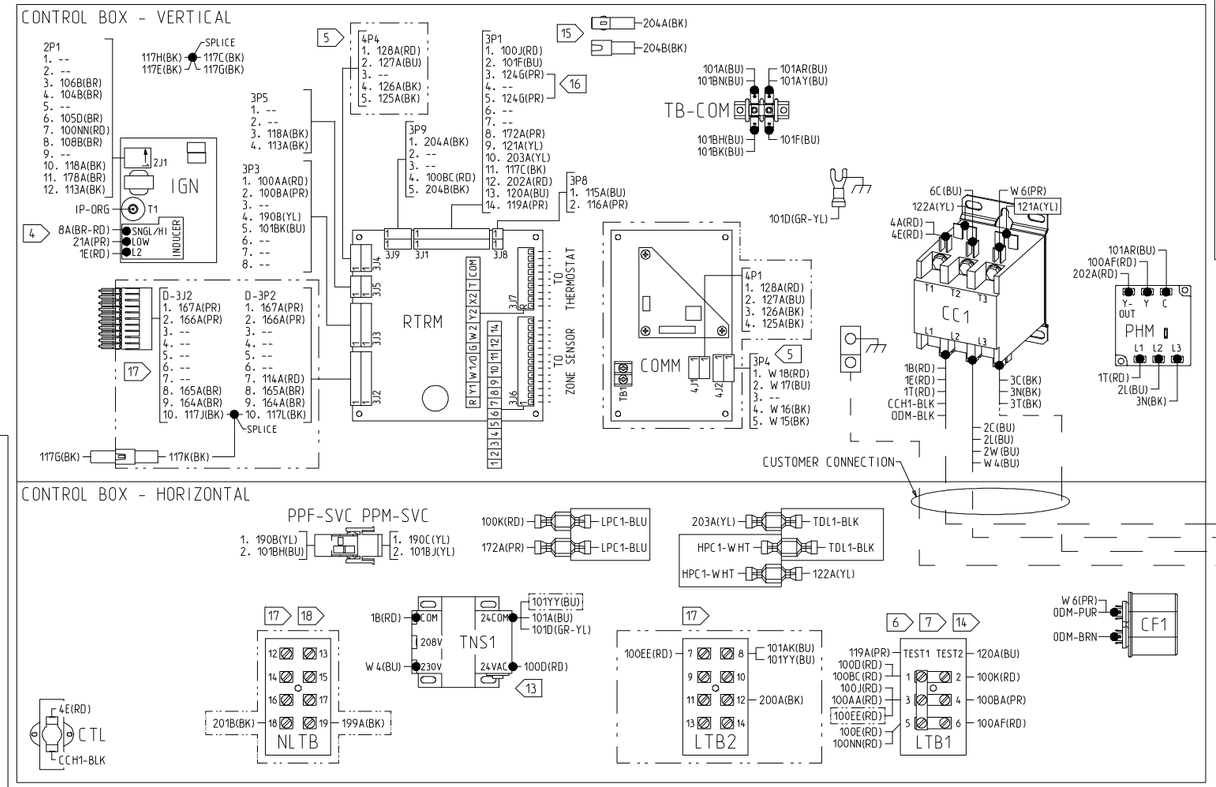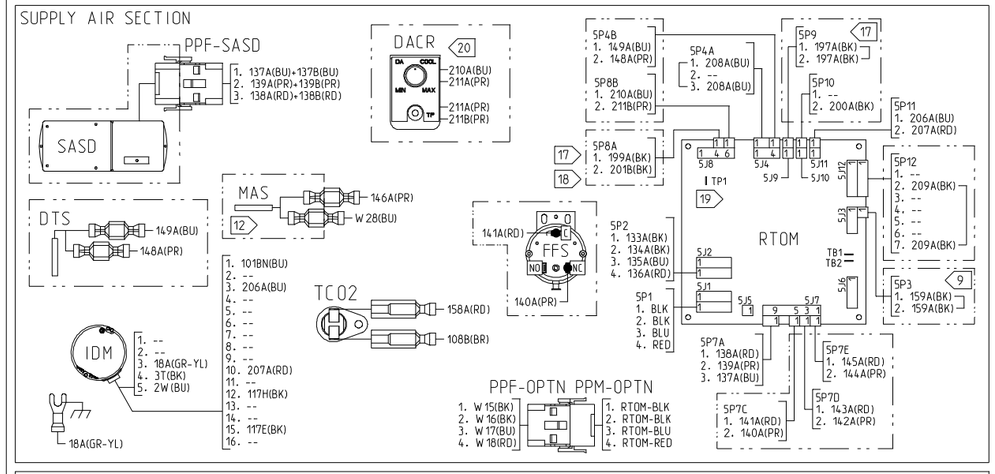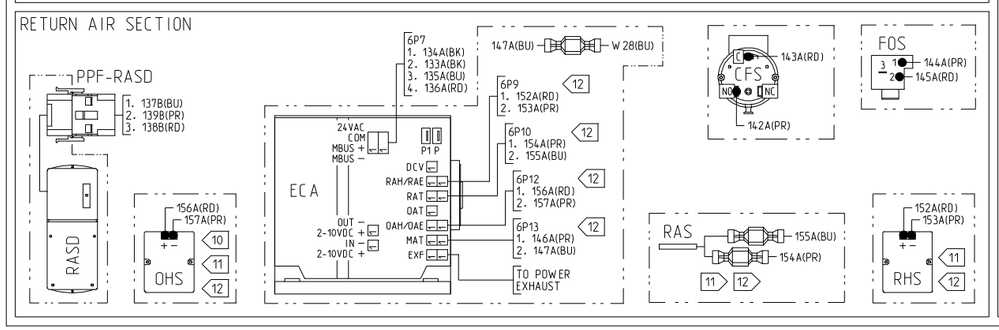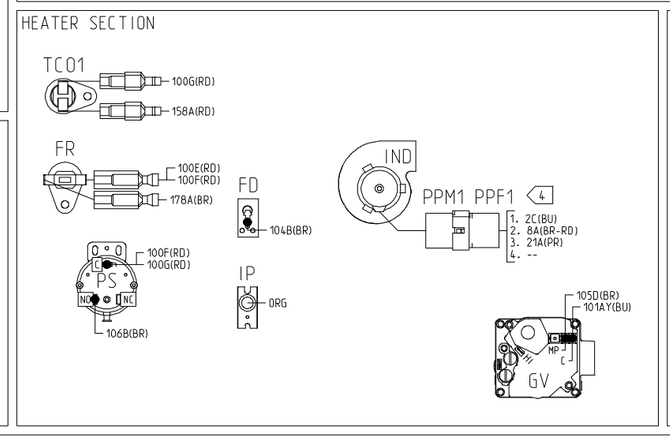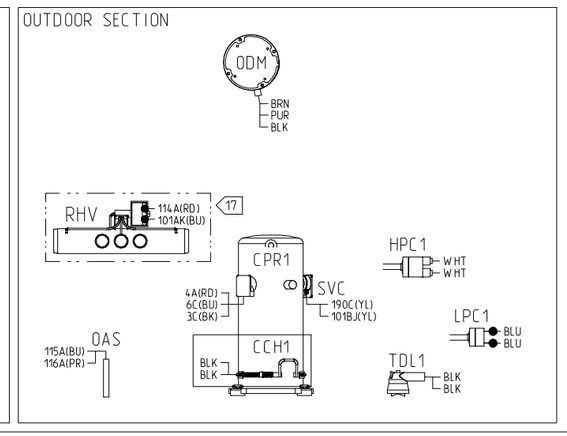
SI NO LO HACE, PUEDE OCASIONAR DAÑO AL EQUIPO.