1. ALL WIRING AND DEVICES SHOWN DASHED TO BE SUPPLIED AND INSTALLED BY THE CUSTOMER IN ACCORDANCE WITH LOCAL AND NATIONAL ELECTRICAL CODES. PHANTOM LINE ENCLOSURES INDICATE ALTERNATE CIRCUITRY OR AVAILABLE SALES OPTIONS.
2. IF ANY OF THE ORIGINAL WIRE, AS SUPPLIED WITH THIS UNIT, MUST BE REPLACED, REPLACE WITH APPLIANCE WIRING MATERIAL RATED AT 105°C.
3. THREE PHASE MOTORS ARE PROTECTED UNDER PRIMARY SINGLE PHASING CONDITIONS. ALL MOTORS HAVE INTERNAL OVERLOAD PROTECTION. COMPRESSORS HAVE INTERNAL THERMAL PROTECTION.
4. CONNECTIONS SHOWN ARE FOR 230V/60HZ/3PH UNITS. WHEN 208V/60HZ/3PH OPERATION IS REQUIRED, MOVE WIRE W4 FROM THE 230V TERMINAL ON TNS1 TO THE 208V TERMINAL.
5. CONNECTIONS SHOWN INCLUDE OPTIONAL COMM, ECA, AND RTOM. PLUG 3P4 IS NOT CONNECTED UNLESS ECA OR RTOM IS INSTALLED. IF ECA OR RTOM IS INSTALLED WITHOUT COMM, 3P4 IS CONNECTED TO RTRM-3J4. IF ECA IS INSTALLED WITHOUT RTOM, 5P2 IS CONNECTED TO PPF30. REFER TO ACCOMPANYING LITERATURE FOR PROPER CONNECTION/COMBINATION OF OPTIONAL COMPONENTS.
6. CONNECTIONS SHOWN INCLUDE OPTIONAL HPC1 AND TDL1. IF NEITHER OPTION IS INSTALLED, CONNECT WIRE W23 TO WIRE 122A. IF EITHER OR BOTH OPTIONS ARE INSTALLED, CONNECT THEM IN SERIES AS SHOWN.
7. OPTIONAL MAS, RAS, RHS, OHS, AND ASSOCIATED WIRING NOT USED WITH MOTORIZED OUTSIDE AIR DAMPER.
8. (FUTURE OPTION) CONNECTIONS SHOWN ARE FOR 2-STAGE GAS HEAT OPERATION. WHEN 1-STAGE OPERATION IS REQUIRED, WIRE 21A IS NOT CONNECTED TO IGN. WIRE 123B IS NOT CONNECTED TO GV. AND WIRE 129A (IF PRESENT) IS CUT AND ISOLATED.
9. MINIMUM HEATING SPEED IS TAP 4. TO SET COOLING AND HEATING TO THE SAME SPEED (TAP 4 OR 5), DISCONNECT WIRE W54 FROM IDM AND CONNECT IT TO THE EXTRA TERMINAL PROVIDED ON WIRE W56.
10. (FUTURE) PHASE MONITOR (PHM) CONNECTIONS SHOWN. CONNECT ENDS OF WIRE 100AG TOGETHER (NOT USED). IF PHM IS NOT INSTALLED, WIRE 100L IS CONNECTED TO LTB-6. WIRES 1T, 2L, 3N, 100AF, 100AG AND 101AR ARE NOT PRESENT.
11. HPC SHOWN IS FOR 410A REFRIGERANT. FOR R22 REFRIGERANT (DIGIT 7 IN MODEL NUMBER EQUALS "A" OR "B") HPC1 WILL HAVE BLACK LEADS AND HPC2 WILL HAVE RED LEADS.
12. COMPONENTS 5P8, 5P9, 5P10, LTB 7-14, NLTB, RHV AND THEIR ASSOCIATED WIRING ARE PRESENT ONLY WITH DEHUMIDIFICATION OPTION.
13. SEE CO2 SENSOR AND VENTILATION OVERRIDE DIAGRAM FOR ADDITIONAL WIRING.
14. TNS1 MAY OCCASIONALLY BE INSTALLED ROTATED 180 DEGREES FROM THE ORIENTATION SHOWN. THE BREAKER ON TNS1 SHOULD ALWAYS BE FACING THE FRONT OF THE UNIT.

⚠ WARNING

HAZARDOUS VOLTAGE!

DISCONNECT ALL ELECTRIC POWER INCLUDING REMOTE DISCONNECTS AND FOLLOW LOCK OUT AND TAG PROCEDURES BEFORE SERVICING. INSURE THAT ALL MOTOR CAPACITORS HAVE DISCHARGED STORED VOLTAGE. UNITS WITH VARIABLE SPEED DRIVE, REFER TO DRIVE INSTRUCTIONS FOR CAPACITOR DISCHARGE.

FAILURE TO DO THE ABOVE BEFORE SERVICING COULD RESULT IN DEATH OR SERIOUS INJURY.

⚠ AVERTISSEMENT

TENSION DANGEREUSE!

COUPER TOUTES LES TENSIONS ET OUVRIR LES SECTIONNEURS À DISTANCE. PUIS SUIVRE LES PROCÉDURES DE VERROUILLAGE ET DES ÉTIQUETTES AVANT TOUTE INTERVENTION. VÉRIFIER QUE TOUS LES CONDENSATEURS DES MOTEURS SONT DÉCHARGÉS. DANS LE CAS D'UNITÉS COMPORTANT DES ENTRAÎNEMENTS À VITESSE VARAIBLE, SE REPORTER AUX INSTRUCTIONS DE L'ENTRAÎNEMENT POUR DÉCHARGER LES CONDENSATEURS.

NE PAS RESPECTER CES MESURES DE PRÉCAUTION PEUT ENTRAÎNER DES BLESSURES GRAVES POUVANT ÊTRE MORTELLES.

⚠ ADVERTENCIA

¡VOLTAJE PELIGROSO!

DESCONECTE TODA LA ENERGÍA ELÉCTRICA, INCLUSO LAS DESCONEXIONES REMOTAS Y SIGA LOS PROCEDIMIENTOS DE CIERRE Y ETIQUETADO ANTES DE PROCEDER AL SERVICIO. ASEGÚRESE DE QUE TODOS LOS CAPACITORES DEL MOTOR HAYAN DESCARGADO EL VOLTAJE ALMACENADO. PARA LAS UNIDADES CON EJE DE DIRECCIÓN DE VELOCIDAD VARIABLE, CONSULTE LAS INSTRUCCIONES PARA LA DESCARGA DEL CONDENSADOR.

EL NO REALIZAR LO ANTERIORMENTE INDICADO, PODRÍA OCASIONAR LA MUERTE O SERIAS LESIONES PERSONALES.

TRANE

THIS DRAWING IS PROPRIETARY AND SHALL NOT BE COPIED OR ITS CONTENTS DISCLOSED TO OUTSIDE PARTIES WITHOUT THE WRITTEN CONSENT OF TRANE © TRANE

DRAWN BY: P.Nichols DATE: 10Apr2006

DO NOT SCALE PRINT — THIRD ANGLE PROJECTION

4366-5185 REV **F**

DIAGRAM
CONNECTION PRINT
YHC(036,048)E3
RELIATEL, X13

IMPORTANT

DO NOT ENERGIZE UNIT UNTIL CHECK-OUT AND START-UP PROCEDURE HAS BEEN COMPLETED.

CAUTION

USE COPPER CONDUCTORS ONLY!

UNIT TERMINALS ARE NOT DESIGNED TO ACCEPT OTHER TYPES OF CONDUCTORS.

FAILURE TO DO SO MAY CAUSE DAMAGE TO THE EQUIPMENT.

ATTENTION

N'UTILISER QUE DES CONDUCTEURS EN CUIVRE!

LES BORNES DE L'UNITÉ NE SONT PAS CONÇUES POUR RECEVOIR D'AUTRES TYPES DE CONDUCTEURS.

L'UTILISATION DE TOUT AUTRE CONDUCTEUR PEUT ENDOMMAGER L'ÉQUIPEMENT.

PRECAUCIÓN

¡UTILICE ÚNICAMENTE CONDUCTORES DE COBRE!

LAS TERMINALES DE LA UNIDAD NO ESTÁN DISEÑADAS PARA ACEPTAR OTROS TIPOS DE CONDUCTORES.
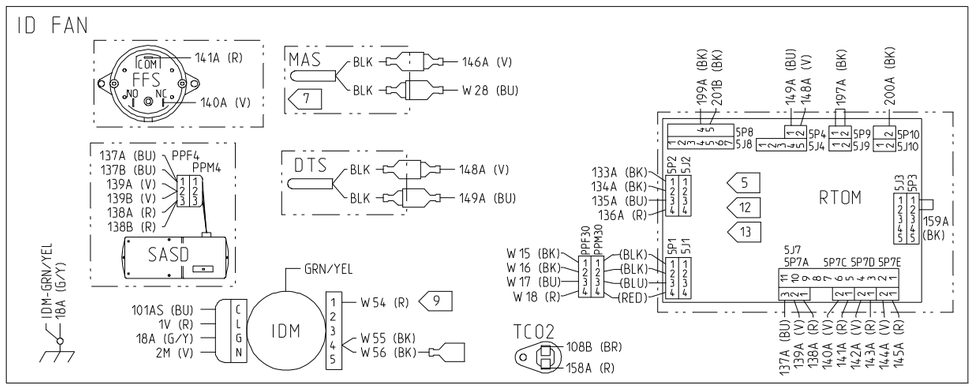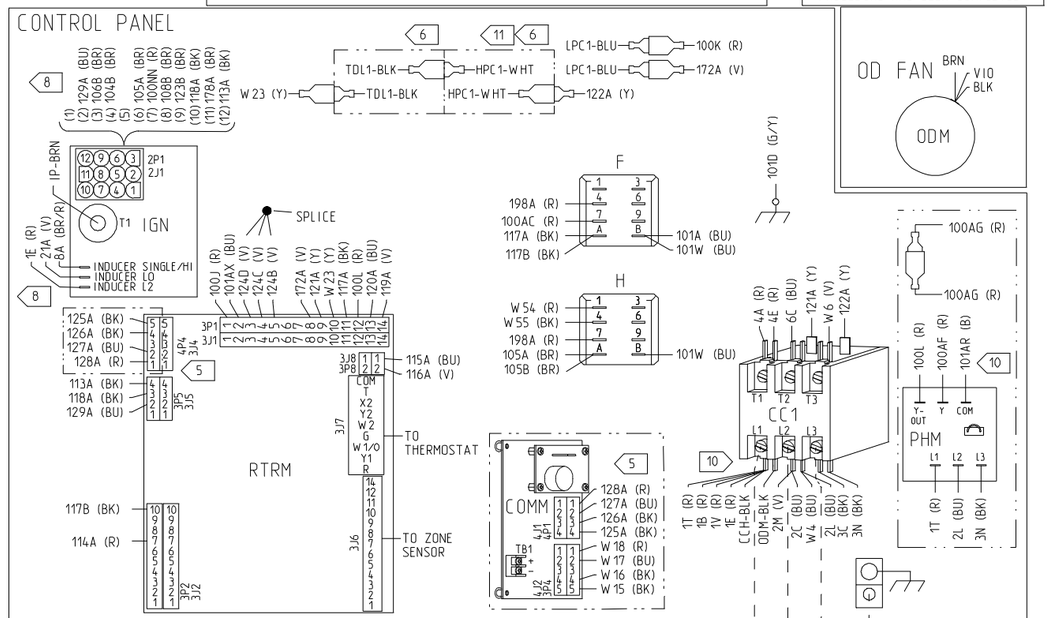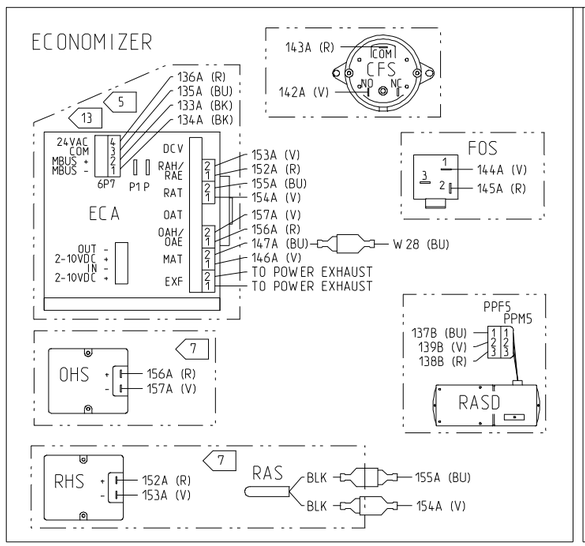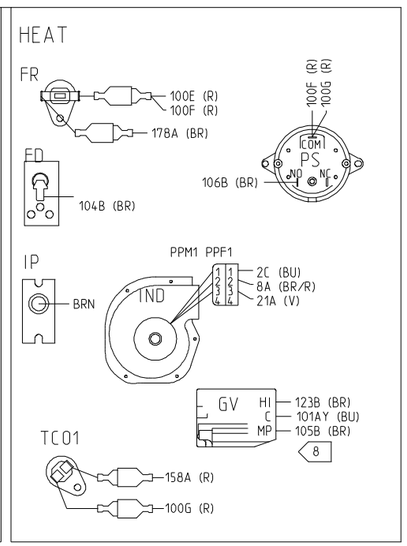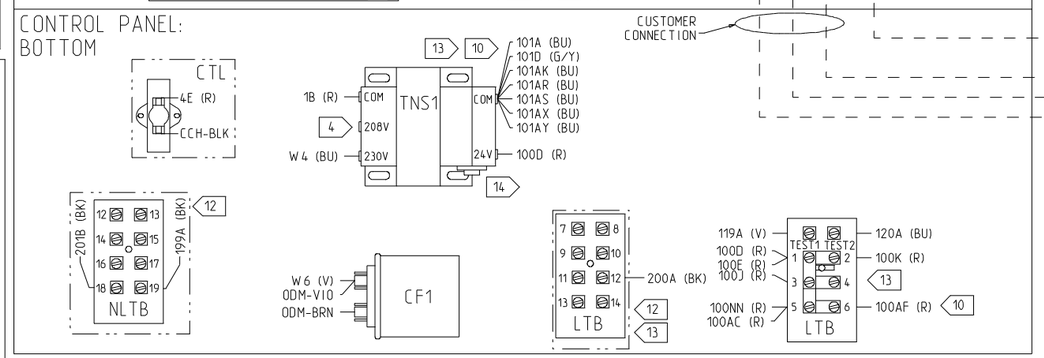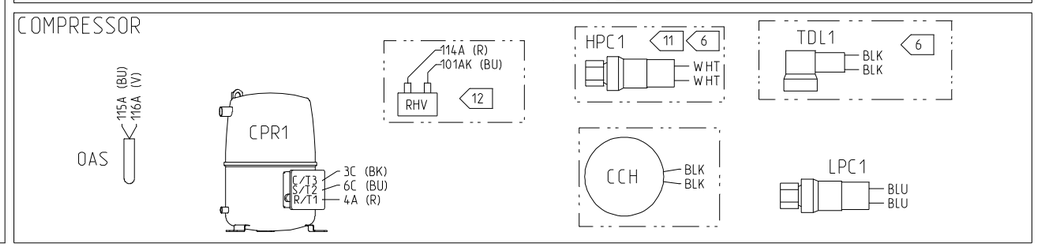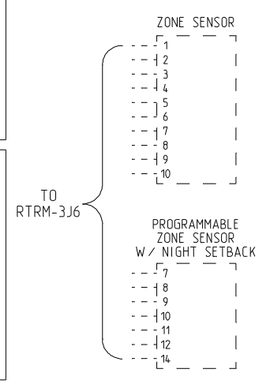
SI NO LO HACE, PUEDE OCASIONAR DAÑO AL EQUIPO.