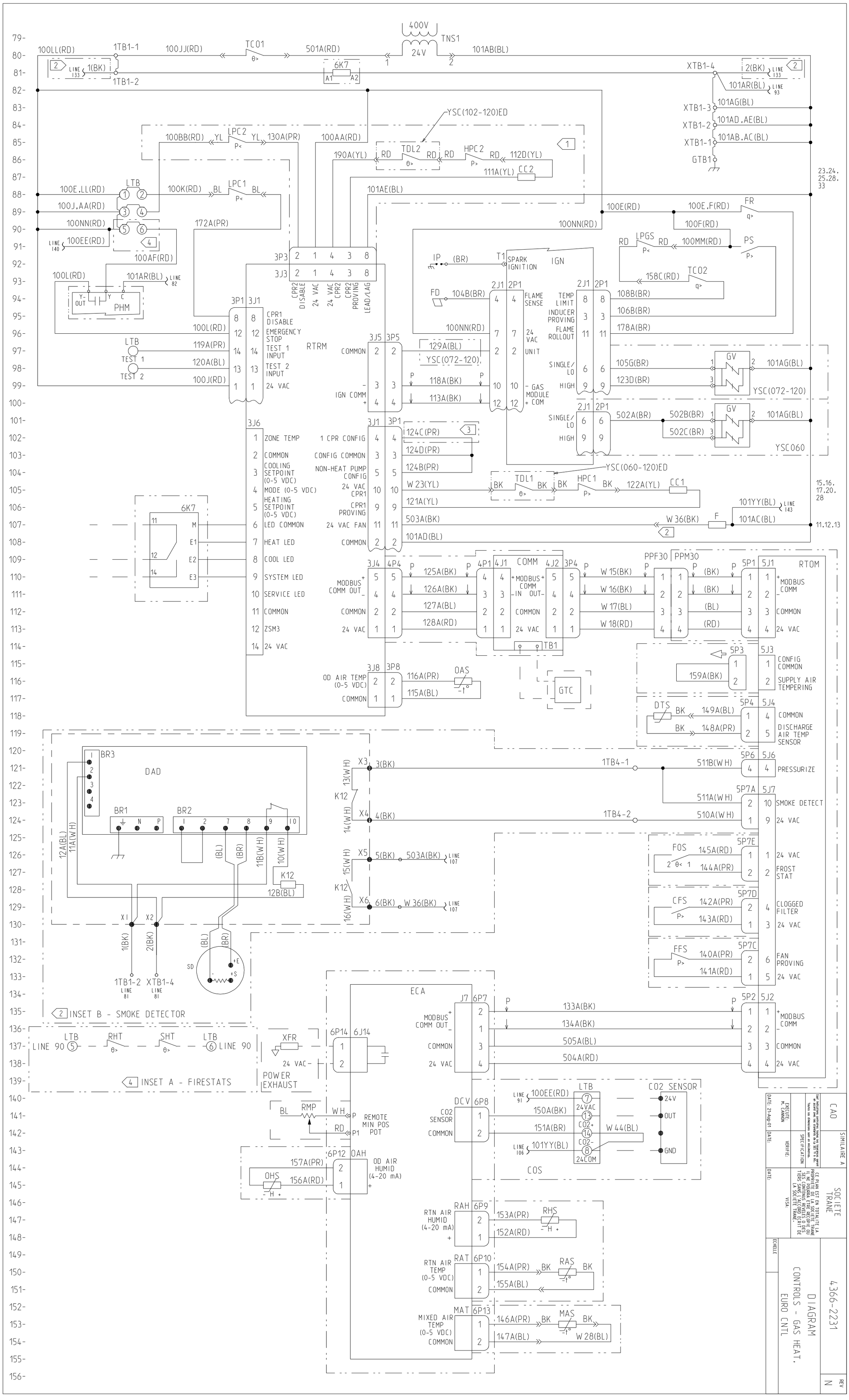
400V
TNS1
24V
TC01
6K7
LPC2
TDL2
HPC2
CC2
YSC(102-120)ED
LTB
LPC1
FR
LPGS
PS
TC02
IP
T1
SPARK IGNITION
IGN
FD
FLAME SENSE
TEMP LIMIT
INDUCER PROVING
FLAME ROLLOUT
SINGLE/LO
HIGH
GV
YSC(072-120)
YSC060
YSC(060-120)ED
TDL1
HPC1
CC1
PHM
RTRM
CPR1 DISABLE
EMERGENCY STOP
TEST 1 INPUT
TEST 2 INPUT
24 VAC
COMMON
IGN COMM
1 CPR CONFIG
CONFIG COMMON
NON-HEAT PUMP CONFIG
24 VAC CPR1
CPR1 PROVING
24 VAC FAN
ZONE TEMP
COOLING SETPOINT (0-5 VDC)
MODE (0-5 VDC)
HEATING SETPOINT (0-5 VDC)
LED COMMON
HEAT LED
COOL LED
SYSTEM LED
SERVICE LED
ZSM3
MODBUS COMM OUT
OD AIR TEMP (0-5 VDC)
OAS
GTC
TB1
COMM
MODBUS COMM IN OUT
PPF30
PPM30
RTOM
MODBUS COMM
CONFIG COMMON
SUPPLY AIR TEMPERING
DTS
DISCHARGE AIR TEMP SENSOR
PRESSURIZE
SMOKE DETECT
FOS
FROST STAT
CFS
CLOGGED FILTER
FFS
FAN PROVING
DAD
BR1
BR2
BR3
K12
SD
INSET B - SMOKE DETECTOR
INSET A - FIRESTATS
XFR
POWER EXHAUST
RMP
REMOTE MIN POS POT
OAH
OD AIR HUMID (4-20 mA)
OHS
ECA
DCV
CO2 SENSOR
COS
RAH
RTN AIR HUMID (4-20 mA)
RHS
RAT
RTN AIR TEMP (0-5 VDC)
RAS
MAT
MIXED AIR TEMP (0-5 VDC)
MAS
CAO
SIMILAIRE A
SOCIETE TRANE
DIAGRAM
CONTROLS - GAS HEAT, EURO CNTL
4366-2231
REV N