1. ALL WIRING AND DEVICES SHOWN DASHED TO BE SUPPLIED AND INSTALLED BY THE CUSTOMER IN ACCORDANCE WITH LOCAL AND NATIONAL ELECTRICAL CODES. PHANTOM LINE ENCLOSURES INDICATE ALTERNATE CIRCUITRY OR AVAILABLE SALES OPTIONS.
2. IF ANY OF THE ORIGINAL WIRE, AS SUPPLIED WITH THIS UNIT, MUST BE REPLACED, REPLACE WITH APPLIANCE WIRING MATERIAL RATED AT 105°C.
3. THREE PHASE MOTORS ARE PROTECTED UNDER PRIMARY SINGLE PHASING CONDITIONS. ALL MOTORS HAVE INTERNAL OVERLOAD PROTECTION. COMPRESSORS HAVE INTERNAL THERMAL PROTECTION.
4. CONNECTIONS SHOWN ARE FOR 230V/60HZ/3PH, 380V/60HZ/3PH, 575V/60HZ/3PH OR 380V 415V/50HZ/3PH UNITS. WHEN 208V/60HZ/3PH OR 460V/60HZ/3PH OPERATION IS REQUIRED, MOVE WIRE W4 FROM THE 230V/400V/575V TERMINAL ON TNS1 TO THE 208V/460V TERMINAL.
5. CCH2 CONDUCTORS ARE IDENTIFIED BY BROWN TAPE PLACED NEAR WIRE TERMINATIONS INSIDE CONTROL PANEL.
6. CONNECTIONS SHOWN INCLUDE OPTIONAL COMM, ECA, AND RTOM. PLUG 3P4 IS NOT CONNECTED UNLESS ECA OR RTOM IS INSTALLED. IF ECA OR RTOM IS INSTALLED WITHOUT COMM, 3P4 IS CONNECTED TO RTRM-3J4. IF ECA IS INSTALLED WITHOUT RTOM, 5P2 IS CONNECTED TO PPF30. REFER TO ACCOMPANYING LITERATURE FOR PROPER CONNECTION/COMBINATION OF OPTIONAL COMPONENTS.
7. OPTIONAL MAS, RAS, RHS, OHS, AND ASSOCIATED WIRING NOT USED WITH MOTORIZED OUTSIDE AIR DAMPER.
8. COMPONENTS 5P8, 5P9, 5P10, NLTB, LTB 7-14, RHV, RTCM AND ASSOCIATED WIRING ARE PRESENT ONLY WITH DEHUMIDIFICATION OPTION.
9. SEE CO2 & VENT. OVERRIDE ACCESSORY DIAGRAM 4366-1003 FOR ADDITIONAL WIRING.
10. CUT AND ISOLATE WIRE 124B IF DEHUMIDIFICATION OPTION IS INSTALLED.
11. IF OPTIONAL PHASE MONITOR (PHM) IS INSTALLED, WIRE 100L IS MOVED FROM LTB-6 TO Y-OUT. 100AF IS CONNECTED TO LTB-6. 101AR IS CONNECTED TO TNS1 SEC. COM. CONNECT WIRE 1T TO CC2-L1, 2L TO CC2-L2, AND 3N TO CC2-L3. CONNECT ENDS OF WIRE 100AG TOGETHER (NOT USED).
12. CUT PHM JUMPER FOR 50HZ
13. HPC CONNECTIONS SHOWN ARE FOR 410A REFRIGERANT. FOR R22 REFRIGERANT (DIGIT 7 IN MODEL NUMBER EQUALS "A" OR "B") HPC01 WILL HAVE BLACK LEADS AND HPC02 WILL HAVE RED LEADS

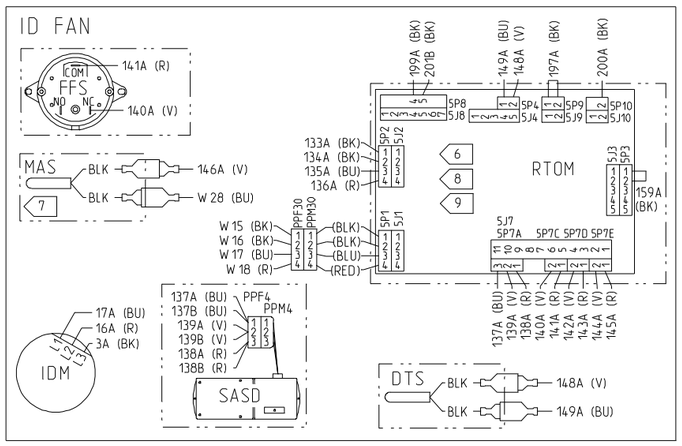

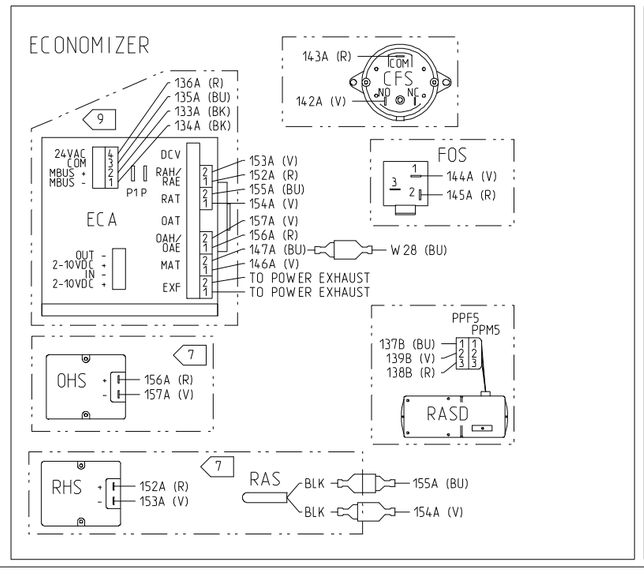

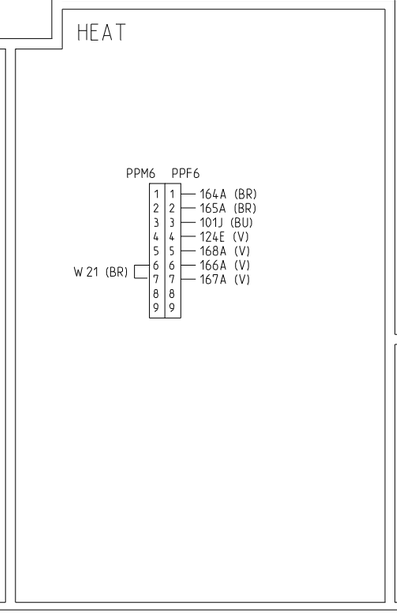

⚠ WARNING

HAZARDOUS VOLTAGE!

DISCONNECT ALL ELECTRIC POWER INCLUDING REMOTE DISCONNECTS AND FOLLOW LOCK OUT AND TAG PROCEDURES BEFORE SERVICING. INSURE THAT ALL MOTOR CAPACITORS HAVE DISCHARGED STORED VOLTAGE. UNITS WITH VARIABLE SPEED DRIVE, REFER TO DRIVE INSTRUCTIONS FOR CAPACITOR DISCHARGE.

FAILURE TO DO THE ABOVE BEFORE SERVICING COULD RESULT IN DEATH OR SERIOUS INJURY.

⚠ AVERTISSEMENT

TENSION DANGEREUSE!

COUPER TOUTES LES TENSIONS ET OUVRIR LES SECTIONNEURS À DISTANCE. PUIS SUIVRE LES PROCÉDURES DE VERROUILLAGE ET DES ÉTIQUETTES AVANT TOUTE INTERVENTION. VÉRIFIER QUE TOUS LES CONDENSATEURS DES MOTEURS SONT DÉCHARGÉS. DANS LE CAS D'UNITÉS COMPORTANT DES ENTRAÎNEMENTS À VITESSE VARAIBLE, SE REPORTER AUX INSTRUCTIONS DE L'ENTRAÎNEMENT POUR DÉCHARGER LES CONDENSATEURS.

NE PAS RESPECTER CES MESURES DE PRÉCAUTION PEUT ENTRAÎNER DES BLESSURES GRAVES POUVANT ÊTRE MORTELLES.

⚠ ADVERTENCIA

¡VOLTAJE PELIGROSO!

DESCONECTE TODA LA ENERGÍA ELÉCTRICA, INCLUSO LAS DESCONEXIONES REMOTAS Y SIGA LOS PROCEDIMIENTOS DE CIERRE Y ETIQUETADO ANTES DE PROCEDER AL SERVICIO. ASEGÚRESE DE QUE TODOS LOS CAPACITORES DEL MOTOR HAYAN DESCARGADO EL VOLTAJE ALMACENADO. PARA LAS UNIDADES CON EJE DE DIRECCIÓN DE VELOCIDAD VARIABLE, CONSULTE LAS INSTRUCCIONES PARA LA DESCARGA DEL CONDENSADOR.

EL NO REALIZAR LO ANTERIORMENTE INDICADO, PODRÍA OCASIONAR LA MUERTE O SERIAS LESIONES PERSONALES.

TRANE

THIS DRAWING IS PROPRIETARY AND SHALL NOT BE COPIED OR ITS CONTENTS DISCLOSED TO OUTSIDE PARTIES WITHOUT THE WRITTEN CONSENT OF TRANE

© TRANE

DRAWN BY: J.Woosley

DATE: 11Jun2001

DO NOT SCALE PRINT

THIRD ANGLE PROJECTION

4366-1534 REV **L**

DIAGRAM
CONNECTION PRINT - COOL ONLY,
7.5-10 TON, RT CNTL

IMPORTANT

DO NOT ENERGIZE UNIT UNTIL CHECK-OUT AND START-UP PROCEDURE HAS BEEN COMPLETED.

CAUTION

USE COPPER CONDUCTORS ONLY!

UNIT TERMINALS ARE NOT DESIGNED TO ACCEPT OTHER TYPES OF CONDUCTORS.

FAILURE TO DO SO MAY CAUSE DAMAGE TO THE EQUIPMENT.

ATTENTION

N'UTILISER QUE DES CONDUCTEURS EN CUIVRE!

LES BORNES DE L'UNITÉ NE SONT PAS CONÇUES POUR RECEVOIR D'AUTRES TYPES DE CONDUCTEURS.

L'UTILISATION DE TOUT AUTRE CONDUCTEUR PEUT ENDOMMAGER L'ÉQUIPEMENT.

PRECAUCIÓN

¡UTILICE ÚNICAMENTE CONDUCTORES DE COBRE!

LAS TERMINALES DE LA UNIDAD NO ESTÁN DISEÑADAS PARA ACEPTAR OTROS TIPOS DE CONDUCTORES.
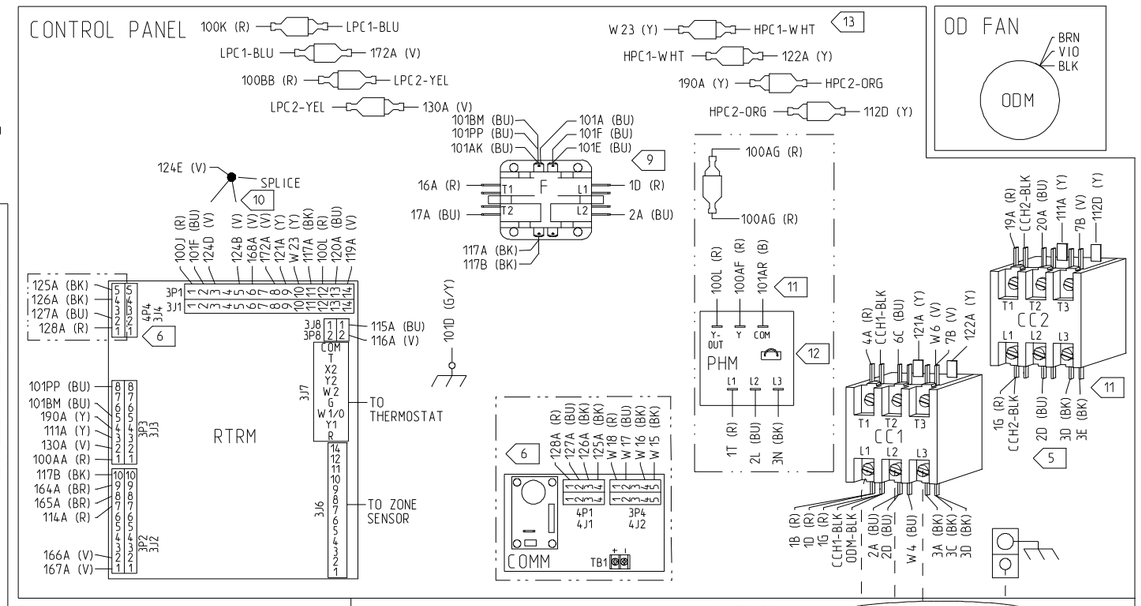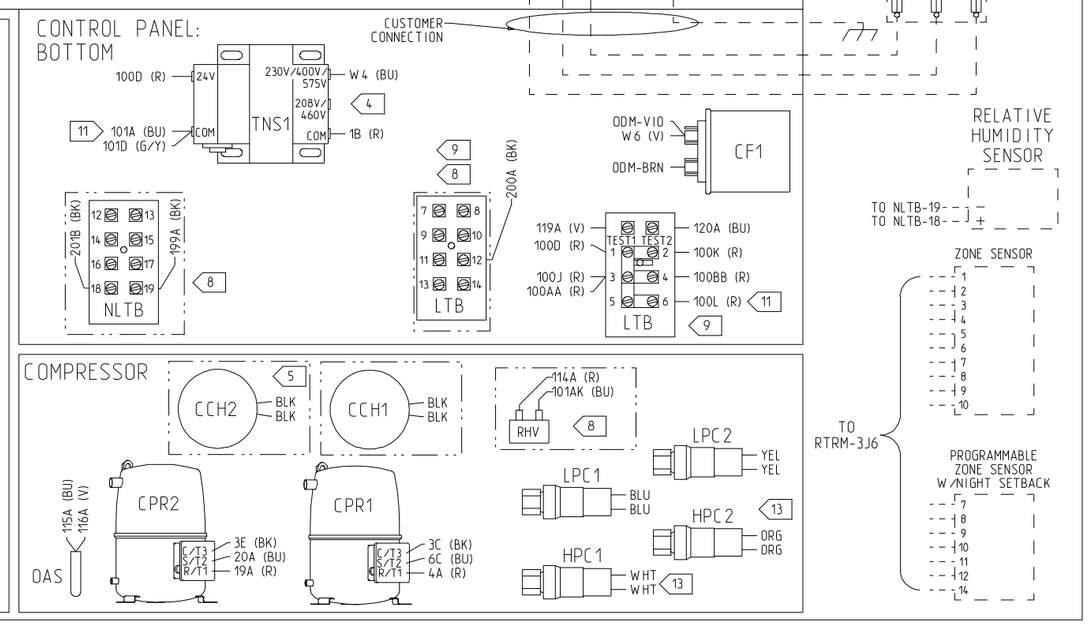
SI NO LO HACE, PUEDE OCASIONAR DAÑO AL EQUIPO.