UNLESS OTHERWISE SPECIFIED ALL DIMENSIONS ARE IN INCHES. TOLERANCE:	TRANE	4366-1096	SHEET 1 OF 1	REV F
.X ±. 0.1 .XX ±. 0.03 .XXX ±. 0.005 ANGLES ±. 2.0 ° HOLE DIA ±. CONFORMS TO ASME Y14.5M-1994.	THIS DRAWING IS PROPRIETARY AND SHALL NOT BE COPIED OR ITS CONTENTS DISCLOSED TO OUTSIDE PARTIES WITHOUT THE WRITTEN CONSENT OF TRANE DRAWN BY: J.W.DOSEY ©TRANE DATE: 03-JAN-01 DO NOT SCALE PRINT THIRD ANGLE PROJECTION	DIAGRAM ELECTRIC HEAT - 6 KW 208V-600V/60Hz/3PH (T.W 036-060)		

LEGEND		
DEVICE DESIGNATION	DESCRIPTION	LINE NUMBER
AH	HEAT CONTACTOR - CIRCUIT A	15,16,23
HTRA	ELECTRIC HEAT ELEMENT	16,20
PPF7	ELECTRIC HEAT PLUG (FEMALE)	23-29
PPM7	ELECTRIC HEAT PLUG (MALE)	23-29
TCOA	THERMAL CUTOUT - AUTO RESET	23
HTB2	HIGH VOLT TERMINAL BLOCK	7

1. UNLESS OTHERWISE NOTED, ALL SWITCHES ARE SHOWN AT 25° C (77° F) AT ATMOSPHERIC PRESSURE, AT 50% RELATIVE HUMIDITY WITH ALL UTILITIES TURNED OFF AND AFTER A NORMAL SHUTDOWN HAS OCCURRED.
2. DASHED LINES INDICATE RECOMMENDED FIELD WIRING BY OTHERS. DASHED LINE ENCLOSURES AND/OR DASHED DEVICE OUTLINES INDICATE COMPONENTS PROVIDED BY THE FIELD. PHANTOM LINE ENCLOSURES INDICATE ALTERNATE CIRCUITRY OR AVAILABLE SALES OPTIONS.
3. NUMBERS ALONG THE RIGHT SIDE OF THE SCHEMATIC DESIGNATE THE LOCATION OF CONTACTS BY LINE NUMBER. AN UNDERLINED NUMBER INDICATES A NORMALLY CLOSED CONTACT.

4 FOR SINGLE POINT POWER, UNCOIL WIRES W1(RED), W2(BLU), AND W3(BLK) AND ROUTE THROUGH BUSHING IN DIVIDER PANEL, UP THROUGH HOLE IN UNIT CONTROL BOX, AND CONNECT TO COMPRESSOR CONTACTOR. (CC1 TERMINALS L1, L2, AND L3. PPF6/PPM6 AND ASSOCIATED WIRING ARE PART OF THE UNIT.)

5 CONNECT WIRE 100T(GRN) TO DIVIDER PANEL FOR BONDING.

6 WIRING SHOWN IS FOR 208-240V HEATER. SEE INSET A FOR 480-600V HEATER.

7 CONNECTIONS SHOWN ARE FOR RELIATEL UNITS. WIRES FOR ELECTRO-MECHANICAL UNITS ARE SHOWN IN BRACKETS.

⚠ WARNING
HAZARDOUS VOLTAGE!

DISCONNECT ALL ELECTRIC POWER INCLUDING REMOTE DISCONNECTS AND FOLLOW LOCK OUT AND TAG PROCEDURES BEFORE SERVICING. INSURE THAT ALL MOTOR CAPACITORS HAVE DISCHARGED STORED VOLTAGE. UNITS WITH VARIABLE SPEED DRIVE, REFER TO DRIVE INSTRUCTIONS FOR CAPACITOR DISCHARGE.

FAILURE TO DO THE ABOVE COULD RESULT IN DEATH OR SERIOUS INJURY.

⚠ AVERTISSEMENT
TENSION DANGEREUSE!

COUPER TOUTES LES TENSIONS ET OUVRIR LES SECTIONNEURS À DISTANCE, PUIS SUIVRE LES PROCÉDURES DE VERROUILLAGE ET DES ÉTIQUETTES AVANT TOUTE INTERVENTION. VÉRIFIER QUE TOUS LES CONDENSATEURS DES MOTEURS SONT DÉCHARGÉS. DANS LE CAS D'UNITÉS COMPORTANT DES ENTRAÎNEMENTS À VITESSE VARAIBLE, SE REPORTER AUX INSTRUCTIONS DE L'ENTRAÎNEMENT POUR DÉCHARGER LES CONDENSATEURS.

NE PAS RESPECTER CES MESURES DE PRÉCAUTION PEUT ENTRAÎNER DES BLESSURES GRAVES POUVANT ÊTRE MORTELLES.

IMPORTANT

DO NOT ENERGIZE UNIT UNTIL CHECK-OUT AND START-UP PROCEDURE HAS BEEN COMPLETED.

CAUTION

USE COPPER CONDUCTORS ONLY!

UNIT TERMINALS ARE NOT DESIGNED TO ACCEPT OTHER TYPES OF CONDUCTORS.
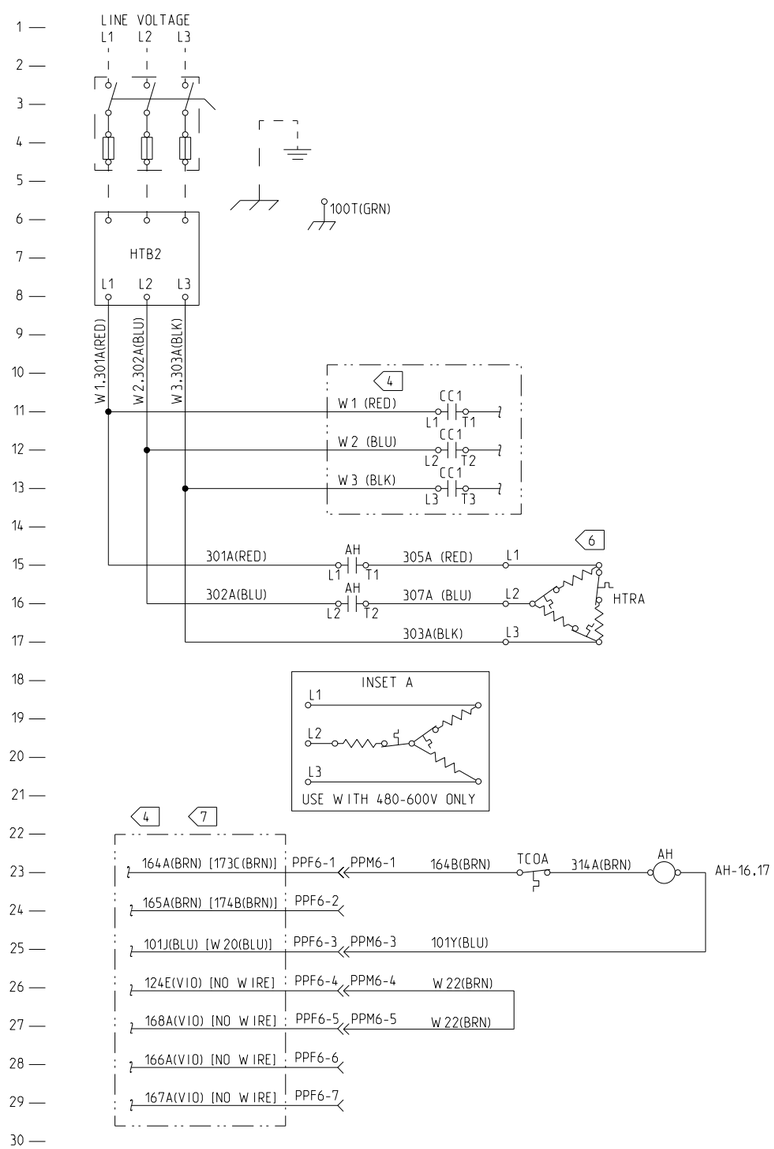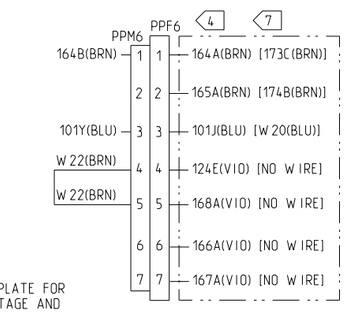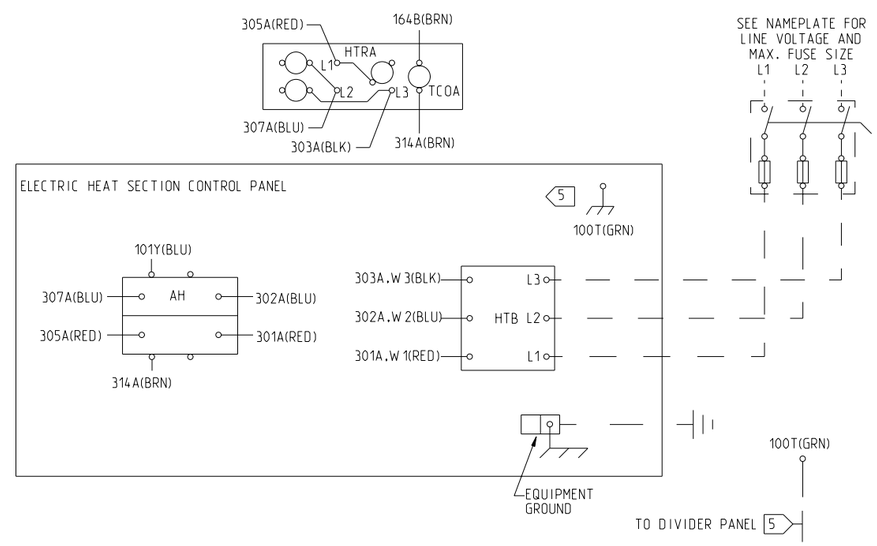
FAILURE TO DO SO MAY CAUSE DAMAGE TO THE EQUIPMENT.