LEGEND		
DEVICE DESIGNATION	DESCRIPTION	LINE NUMBER
AH	HEAT CONTACTOR - CIRCUIT A	15,16,23
CC1	COMPRESSOR CONTACTOR	11-13
FU3-FU5	UNIT FUSE	11-13
FU6-FU8	ELECTRIC HEAT FUSE	15-17
HTB2	HIGH VOLT TERMINAL BLOCK	7
HTRA	ELECTRIC HEAT ELEMENT	15-17
PPF6	ELECTRIC HEAT PLUG (FEMALE)	23-29
PPM6	ELECTRIC HEAT PLUG (MALE)	23-29
TCOA	THERMAL CUTOUT - AUTO RESET	23

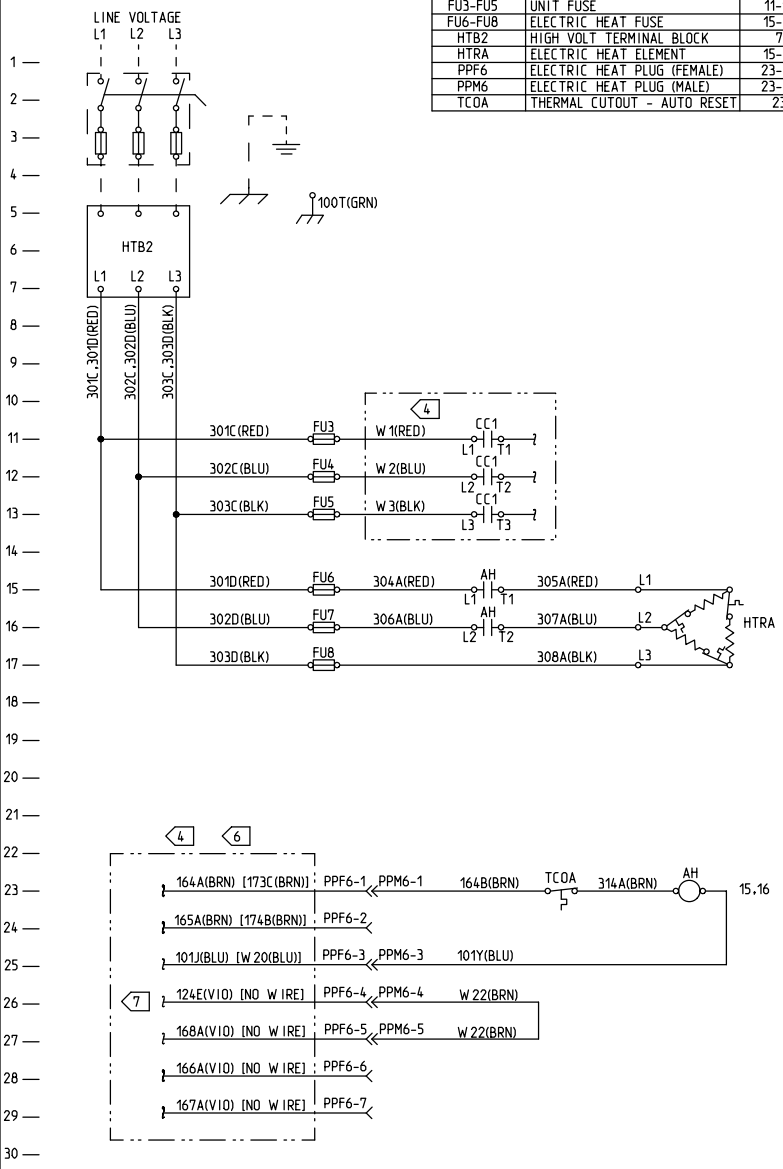

NOTES:

1. UNLESS OTHERWISE NOTED, ALL SWITCHES ARE SHOWN AT 25° C (77° F) AT ATMOSPHERIC PRESSURE, AT 50% RELATIVE HUMIDITY WITH ALL UTILITIES TURNED OFF AND AFTER A NORMAL SHUTDOWN HAS OCCURRED.

2. DASHED LINES INDICATE RECOMMENDED FIELD WIRING BY OTHERS. DASHED LINE ENCLOSURES AND/OR DASHED DEVICE OUTLINES INDICATE COMPONENTS PROVIDED BY THE FIELD. PHANTOM LINE ENCLOSURES INDICATE ALTERNATE CIRCUITRY OR AVAILABLE SALES OPTIONS.

3. NUMBERS ALONG THE RIGHT SIDE OF THE SCHEMATIC DESIGNATE THE LOCATION OF CONTACTS BY LINE NUMBER. AN UNDERLINED NUMBER INDICATES A NORMALLY CLOSED CONTACT.

4. FOR SINGLE POINT POWER, UNCOIL WIRES W1(RED), W2(BLU), AND W3(BLK) AND ROUTE THROUGH BUSHING IN DIVIDER PANEL, UP THROUGH HOLE IN UNIT CONTROL BOX, AND CONNECT TO COMPRESSOR CONTACTOR. (CC1 TERMINALS L1, L2, AND L3, PPF6/PPM6 AND ASSOCIATED WIRING ARE PART OF THE UNIT.)

5. CONNECT WIRE 100T(GRN) TO DIVIDER PANEL FOR BONDING.

6. CONNECTIONS SHOWN ARE FOR RELIATEL UNITS. WIRES FOR ELECTRO-MECHANICAL UNITS ARE SHOWN IN BRACKETS.

7. WIRE 131A(VIO) REPLACES WIRE 124E(VIO) ON 10 TON HEAT PUMP UNITS.

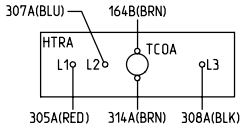

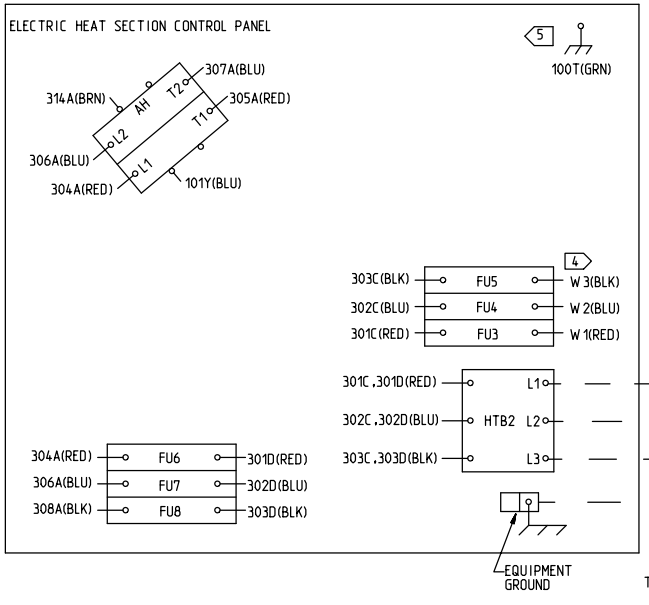

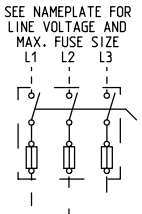

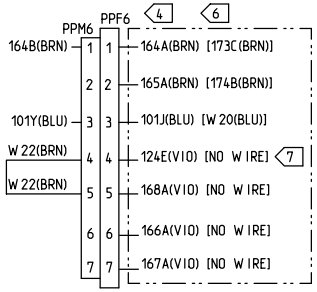

TRANE
A DIVISION OF AMERICAN STANDARD INC.
ALL RIGHTS RESERVED
THIS DRAWING IS PROPRIETARY AND SHALL NOT BE COPIED OR ITS CONTENTS DISCLOSED TO OUTSIDE PARTIES WITHOUT THE WRITTEN CONSENT OF TRANE

DRAWN BY: J.Woosley © DATE: 12-Sep-01

DO NOT SCALE PRINT

SIMILAR TO:

THIRD ANGLE PROJECTION

4366-1084 REV **D**

DIAGRAM
ELECTRIC HEAT - 9 &18 KW
240V/60Hz/3Ph
(T,W 072-120)

⚠ WARNING
HAZARDOUS VOLTAGE!

DISCONNECT ALL ELECTRIC POWER INCLUDING REMOTE DISCONNECTS AND FOLLOW LOCK OUT AND TAG PROCEDURES BEFORE SERVICING. INSURE THAT ALL MOTOR CAPACITORS HAVE DISCHARGED STORED VOLTAGE. UNITS WITH VARIABLE SPEED DRIVE, REFER TO DRIVE INSTRUCTIONS FOR CAPACITOR DISCHARGE.

FAILURE TO DO THE ABOVE COULD RESULT IN DEATH OR SERIOUS INJURY.

⚠ AVERTISSEMENT
TENSION DANGEREUSE!

COUPER TOUTES LES TENSIONS ET OUVRIR LES SECTIONNEURS À DISTANCE, PUIS SUIVRE LES PROCÉDURES DE VERROUILLAGE ET DES ÉTIQUETTES AVANT TOUTE INTERVENTION. VÉRIFIER QUE TOUS LES CONDENSATEURS DES MOTEURS SONT DÉCHARGÉS. DANS LE CAS D'UNITÉS COMPORTANT DES ENTRAÎNEMENTS À VITESSE VARAIBLE, SE REPORTER AUX INSTRUCTIONS DE L'ENTRAÎNEMENT POUR DÉCHARGER LES CONDENSATEURS.

NE PAS RESPECTER CES MESURES DE PRÉCAUTION PEUT ENTRAÎNER DES BLESSURES GRAVES POUVANT ÊTRE MORTELLES.

IMPORTANT

DO NOT ENERGIZE UNIT UNTIL CHECK-OUT AND START-UP PROCEDURE HAS BEEN COMPLETED.

CAUTION

USE COPPER CONDUCTORS ONLY!

UNIT TERMINALS ARE NOT DESIGNED TO ACCEPT OTHER TYPES OF CONDUCTORS.

FAILURE TO DO SO MAY CAUSE DAMAGE TO THE EQUIPMENT.

FUSE REPLACEMENT TABLE			
ELECTRIC HEAT FUSES			
HEATER SIZE	FUSE NAME	FUSE CLASS	FUSE SIZE
9-18KW, 208/240V	FU6-FU8	T,300V	60A
UNIT FUSES FU3-FU5			
UNIT CAPACITY, VOLTS	HEATER MODEL SERIES	FUSE CLASS	FUSE SIZE
072-092, 208/230V	BAYHTRS309, S318, T309	T,300V	60A
092-102, 208/230V	BAYHTRT318	RK5, 300V	60A
120, 208/230V	BAYHTRT318	RK5, 300V	70A