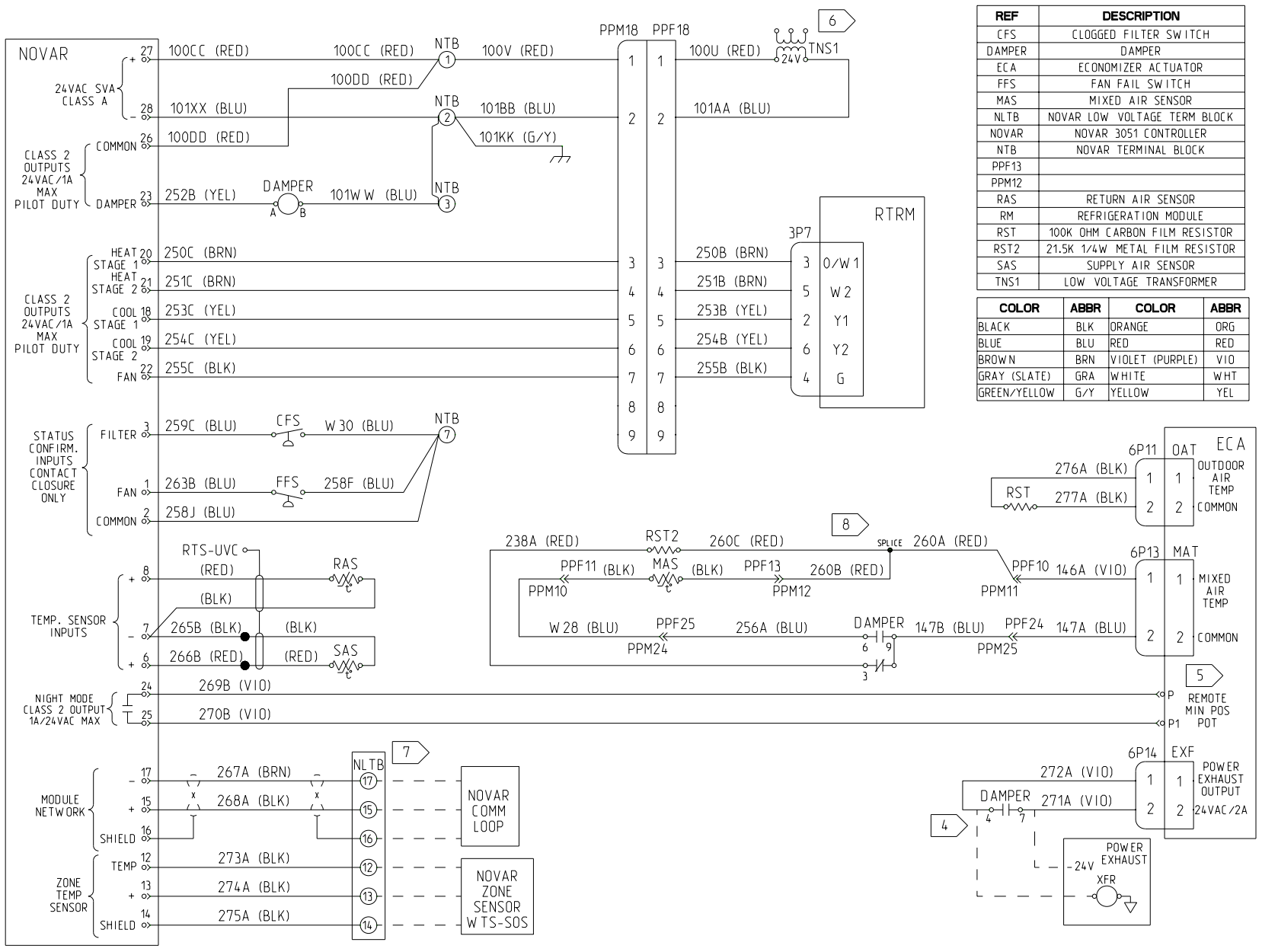

REF	DESCRIPTION
CFS	CLOGGED FILTER SWITCH
DAMPER	DAMPER
ECA	ECONOMIZER ACTUATOR
FFS	FAN FAIL SWITCH
MAS	MIXED AIR SENSOR
NLTB	NOVAR LOW VOLTAGE TERM BLOCK
NOVAR	NOVAR 3051 CONTROLLER
NTB	NOVAR TERMINAL BLOCK
PPF13	
PPM12	
RAS	RETURN AIR SENSOR
RM	REFRIGERATION MODULE
RST	100K OHM CARBON FILM RESISTOR
RST2	21.5K 1/4W METAL FILM RESISTOR
SAS	SUPPLY AIR SENSOR
TNS1	LOW VOLTAGE TRANSFORMER

COLOR	ABBR	COLOR	ABBR
BLACK	BLK	ORANGE	ORG
BLUE	BLU	RED	RED
BROWN	BRN	VIOLET (PURPLE)	VIO
GRAY (SLATE)	GRA	WHITE	WHT
GREEN/YELLOW	G/Y	YELLOW	YEL

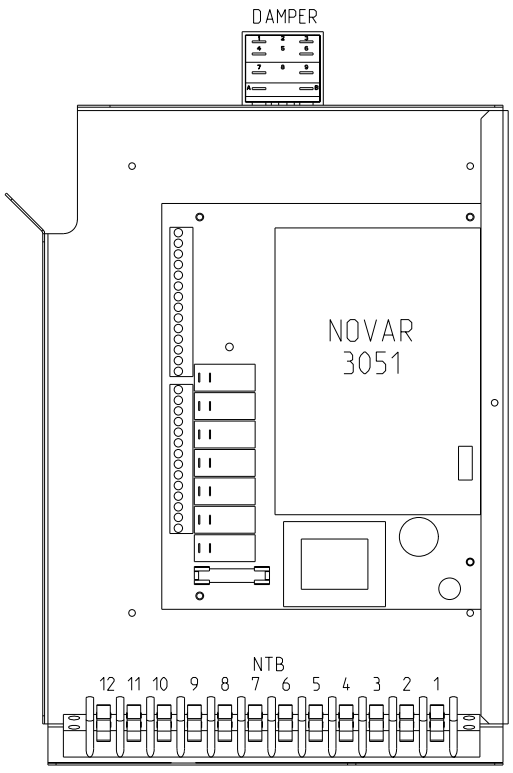

1. THIS UNIT HAS FACTORY-INSTALLED NOVAR CONTROLS ETM-3051. REFER TO THIS DRAWING FOR NOVAR INTERFACE TO UNIT. (SEE UNIT DIAGRAMS FOR REMAINING WIRING.)
2. PLACE WIRING LABEL ON INSIDE OF NOVAR ENCLOSURE.
3. CLS-2 AND ASSOCIATED WIRES ARE SUPPLIED, BUT NOT USED, ON SINGLE REFRIGERATION CIRCUITS. CC2 AND ASSOCIATED WIRES ARE USED ONLY ON DUAL CIRCUIT UNITS.

4 ECONOMIZER ACTUATOR DRIVES TO MINIMUM POSITION ON CALL FOR FAN. ACTUATOR WILL MODULATE TO MAINTAIN 50-55° F SUPPLY AIR ON A CALL FOR DAMPER AND OPTIONAL EXHAUST FAN WILL RUN. FOR FULL OPEN ECONOMIZER, REPLACE MAS WITH A JUMPER.

5 ECONOMIZER MIN. POS. IS OVERRIDDEN TO FULL CLOSED DURING UNOCCUPIED PERIODS. PLACE JUMPER BETWEEN P AND P1 TO DISABLE THIS FUNCTION.

6 REPLACE 50VA TRANSFORMER WITH 75VA TRANSFORMER FOR GAS HEAT OPERATION.

7 NLTB IS MOUNTED IN THE CONTROL BOX.

8 IF NOVAR DCV KIT IS NOT INSTALLED, WIRE 146A(VIO) IS CONNECTED TO MAS BLK LEAD AND WIRES 260A(RED), 260B(RED), 260C(RED) AND 238A(RED) ARE NOT PRESENT.

4366-1047

6.5"

LABEL MATERIAL SPECIFICATION -
CERTIFIED SOURCE: WAUSAU (UNIMATE)
MATERIAL: #80 WHITE LATEX IMPREGNATED WAUSAU COATED PAPER
PRINTING PROCESS: OFFSET PRESS
ADHESIVE: UNIMATE PERMANENT ADHESIVE

TRANE

THIS DRAWING IS PROPRIETARY AND SHALL NOT BE COPIED OR ITS CONTENTS DISCLOSED TO OUTSIDE PARTIES WITHOUT THE WRITTEN CONSENT OF TRANE
© TRANE

DRAWN BY: K. VICKMARK
DATE: 14-Dec-07
DO NOT SCALE PRINT
THIRD ANGLE PROJECTION

4366-1047
DIAGRAM
NOVAR 3051
--
--
REV F