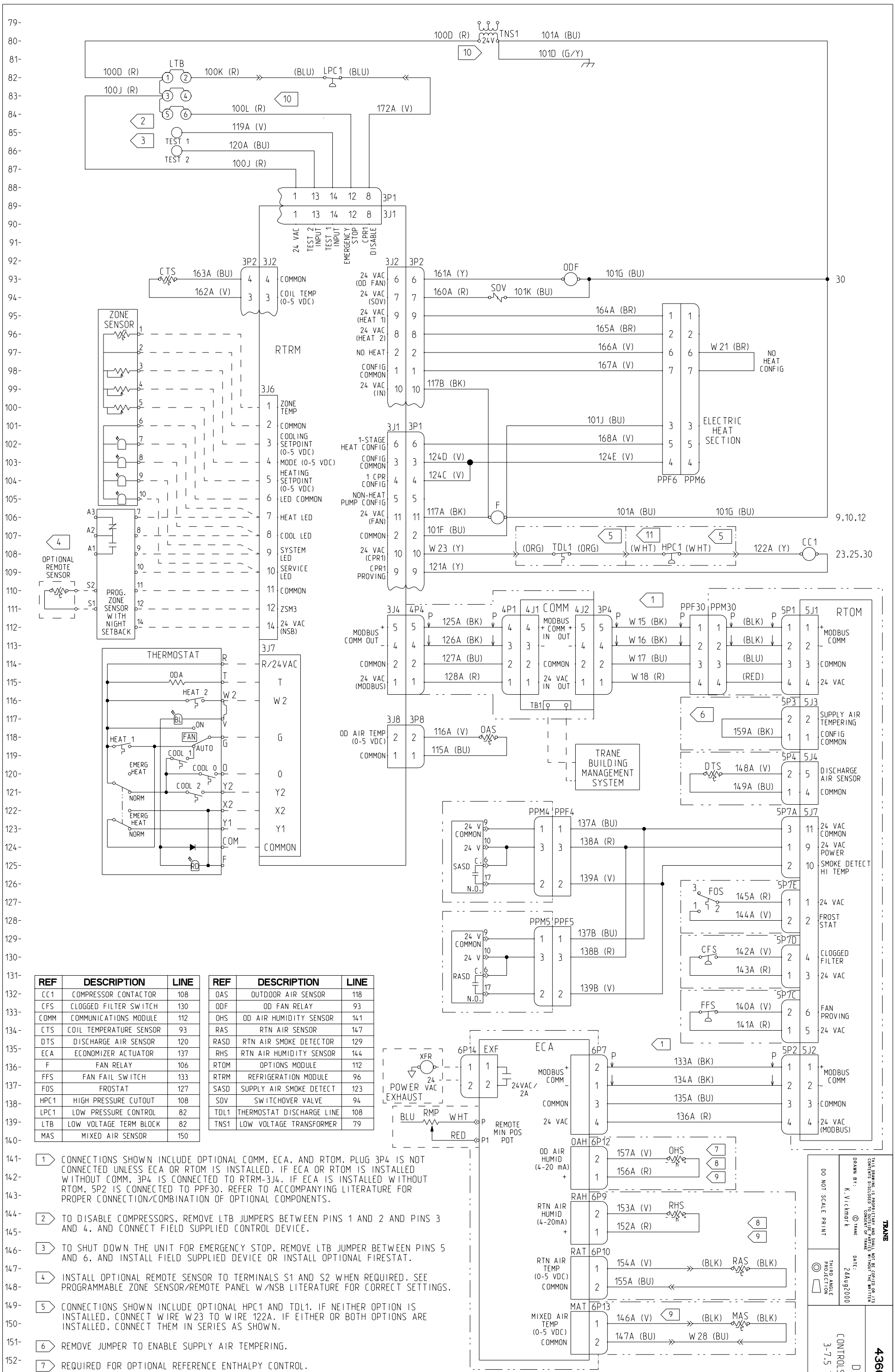

REF	DESCRIPTION	LINE
CC1	COMPRESSOR CONTACTOR	108
CFS	CLOGGED FILTER SWITCH	130
COMM	COMMUNICATIONS MODULE	112
CTS	COIL TEMPERATURE SENSOR	93
DTS	DISCHARGE AIR SENSOR	120
ECA	ECONOMIZER ACTUATOR	137
F	FAN RELAY	106
FFS	FAN FAIL SWITCH	133
FOS	FROSTAT	127
HPC1	HIGH PRESSURE CUTOUT	108
LPC1	LOW PRESSURE CONTROL	82
LTB	LOW VOLTAGE TERM BLOCK	82
MAS	MIXED AIR SENSOR	150

REF	DESCRIPTION	LINE
OAS	OUTDOOR AIR SENSOR	118
ODF	OD FAN RELAY	93
OHS	OD AIR HUMIDITY SENSOR	141
RAS	RTN AIR SENSOR	147
RASD	RTN AIR SMOKE DETECTOR	129
RHS	RTN AIR HUMIDITY SENSOR	144
RTOM	OPTIONS MODULE	112
RTRM	REFRIGERATION MODULE	96
SASD	SUPPLY AIR SMOKE DETECT	123
SOV	SWITCHOVER VALVE	94
TDL1	THERMOSTAT DISCHARGE LINE	108
TNS1	LOW VOLTAGE TRANSFORMER	79

1. CONNECTIONS SHOWN INCLUDE OPTIONAL COMM, ECA, AND RTOM. PLUG 3P4 IS NOT CONNECTED UNLESS ECA OR RTOM IS INSTALLED. IF ECA OR RTOM IS INSTALLED WITHOUT COMM, 3P4 IS CONNECTED TO RTRM-3J4. IF ECA IS INSTALLED WITHOUT RTOM, 5P2 IS CONNECTED TO PPF30. REFER TO ACCOMPANYING LITERATURE FOR PROPER CONNECTION/COMBINATION OF OPTIONAL COMPONENTS.
2. TO DISABLE COMPRESSORS, REMOVE LTB JUMPERS BETWEEN PINS 1 AND 2 AND PINS 3 AND 4, AND CONNECT FIELD SUPPLIED CONTROL DEVICE.
3. TO SHUT DOWN THE UNIT FOR EMERGENCY STOP, REMOVE LTB JUMPER BETWEEN PINS 5 AND 6, AND INSTALL FIELD SUPPLIED DEVICE OR INSTALL OPTIONAL FIRESTAT.
4. INSTALL OPTIONAL REMOTE SENSOR TO TERMINALS S1 AND S2 WHEN REQUIRED. SEE PROGRAMMABLE ZONE SENSOR/REMOTE PANEL W/NSB LITERATURE FOR CORRECT SETTINGS.
5. CONNECTIONS SHOWN INCLUDE OPTIONAL HPC1 AND TDL1. IF NEITHER OPTION IS INSTALLED, CONNECT WIRE W23 TO WIRE 122A. IF EITHER OR BOTH OPTIONS ARE INSTALLED, CONNECT THEM IN SERIES AS SHOWN.
6. REMOVE JUMPER TO ENABLE SUPPLY AIR TEMPERING.
7. REQUIRED FOR OPTIONAL REFERENCE ENTHALPY CONTROL.
8. REQUIRED FOR OPTIONAL COMPARATIVE ENTHALPY CONTROL.
9. OPTIONAL MAS, RAS, RHS, OHS, AND ASSOCIATED WIRING NOT USED WITH MOTORIZED OUTSIDE AIR DAMPER.
10. IF OPTIONAL PHASE MONITOR (PHM) IS INSTALLED, CONNECT ENDS OF 100AG TOGETHER (NOT USED). MOVE WIRE 100L FROM LTB-6 TO PHM Y-OUT. CONNECT WIRE 100AF FROM PHM Y TO LTB-6. CONNECT WIRE 101AR FROM PHM COM TO TNS1 SEC. COM. SEE POWER DIAGRAM.
11. HPC SHOWN IS 410A. R22 REFRIGERANT (DIGIT 7 IN MODEL NUMBER EQUALS "A" OR "B") HPC1 WILL HAVE BLACK LEADS AND HPC2 WILL HAVE RED LEADS.

TRANE
THIS DRAWING IS PROPRIETARY AND SHALL NOT BE COPIED OR ITS CONTENTS DISCLOSED TO ANY PARTY WITHOUT THE WRITTEN CONSENT OF TRANE
© TRANE
DRAWN BY: K.Vickmark
DATE: 24Aug2000
DO NOT SCALE PRINT
THIRD ANGLE PROJECTION

4366-1007

DIAGRAM
CONTROLS - HEAT PUMP,
3-7.5 TON, RT CNTL

REV L