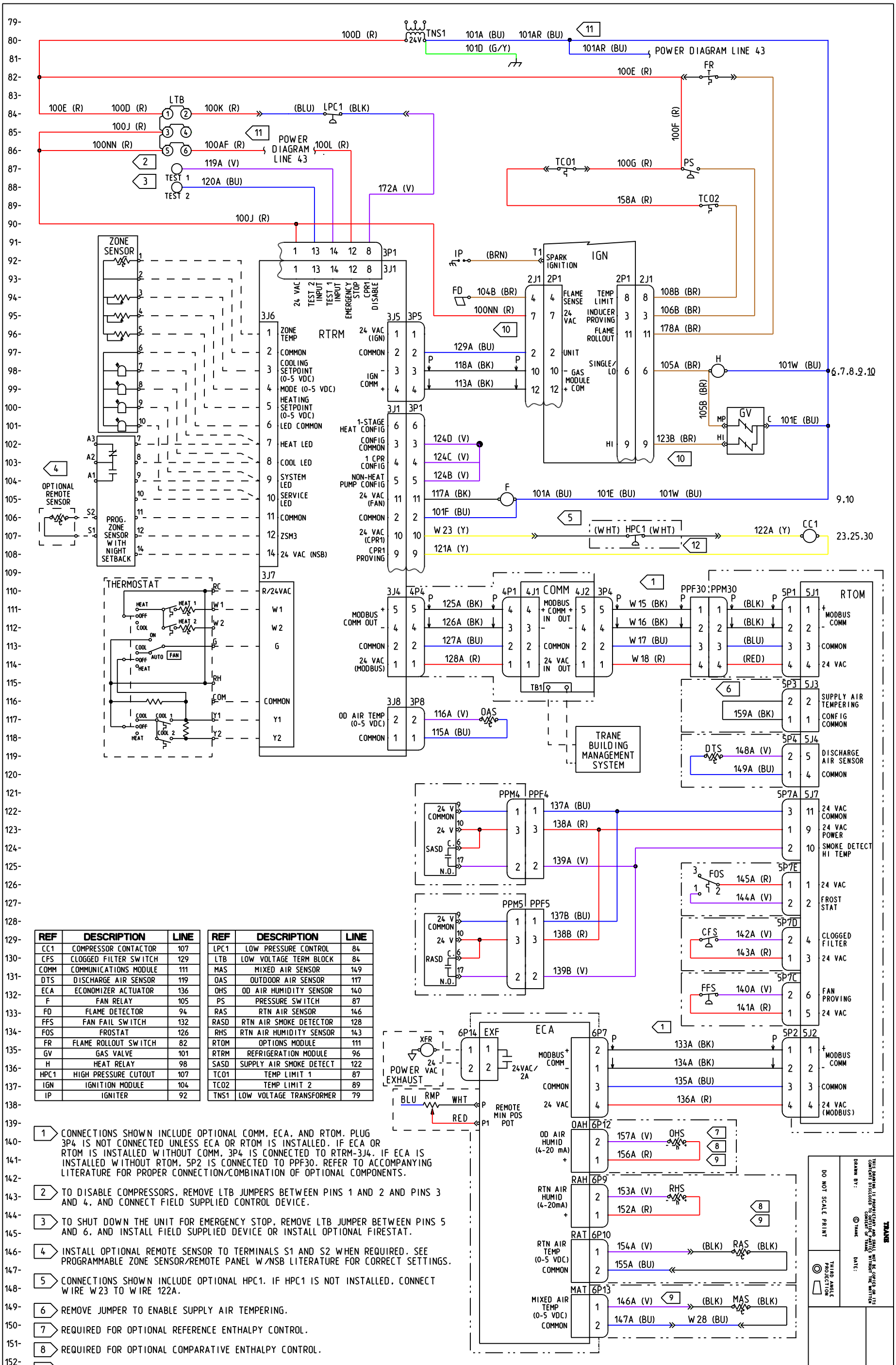

REF	DESCRIPTION	LINE
CC1	COMPRESSOR CONTACTOR	107
CFS	CLOGGED FILTER SWITCH	129
COMM	COMMUNICATIONS MODULE	111
DTS	DISCHARGE AIR SENSOR	119
ECA	ECONOMIZER ACTUATOR	136
F	FAN RELAY	105
FD	FLAME DETECTOR	94
FFS	FAN FAIL SWITCH	132
FOS	FROSTAT	126
FR	FLAME ROLLOUT SWITCH	82
GV	GAS VALVE	101
H	HEAT RELAY	98
HPC1	HIGH PRESSURE CUTOUT	107
IGN	IGNITION MODULE	104
IP	IGNITER	92

REF	DESCRIPTION	LINE
LPC1	LOW PRESSURE CONTROL	84
LTB	LOW VOLTAGE TERM BLOCK	84
MAS	MIXED AIR SENSOR	149
OAS	OUTDOOR AIR SENSOR	117
OHS	OD AIR HUMIDITY SENSOR	140
PS	PRESSURE SWITCH	87
RAS	RTN AIR SENSOR	146
RASD	RTN AIR SMOKE DETECTOR	128
RHS	RTN AIR HUMIDITY SENSOR	143
RTOM	OPTIONS MODULE	111
RTRM	REFRIGERATION MODULE	96
SASD	SUPPLY AIR SMOKE DETECT	122
TC01	TEMP LIMIT 1	87
TC02	TEMP LIMIT 2	89
TNS1	LOW VOLTAGE TRANSFORMER	79

1. CONNECTIONS SHOWN INCLUDE OPTIONAL COMM, ECA, AND RTOM. PLUG 3P4 IS NOT CONNECTED UNLESS ECA OR RTOM IS INSTALLED. IF ECA OR RTOM IS INSTALLED WITHOUT COMM, 3P4 IS CONNECTED TO RTRM-3J4. IF ECA IS INSTALLED WITHOUT RTOM, 5P2 IS CONNECTED TO PPF30. REFER TO ACCOMPANYING LITERATURE FOR PROPER CONNECTION/COMBINATION OF OPTIONAL COMPONENTS.
2. TO DISABLE COMPRESSORS, REMOVE LTB JUMPERS BETWEEN PINS 1 AND 2 AND PINS 3 AND 4, AND CONNECT FIELD SUPPLIED CONTROL DEVICE.
3. TO SHUT DOWN THE UNIT FOR EMERGENCY STOP, REMOVE LTB JUMPER BETWEEN PINS 5 AND 6, AND INSTALL FIELD SUPPLIED DEVICE OR INSTALL OPTIONAL FIRESTAT.
4. INSTALL OPTIONAL REMOTE SENSOR TO TERMINALS S1 AND S2 WHEN REQUIRED. SEE PROGRAMMABLE ZONE SENSOR/REMOTE PANEL W/NSB LITERATURE FOR CORRECT SETTINGS.
5. CONNECTIONS SHOWN INCLUDE OPTIONAL HPC1. IF HPC1 IS NOT INSTALLED, CONNECT WIRE W23 TO WIRE 122A.
6. REMOVE JUMPER TO ENABLE SUPPLY AIR TEMPERING.
7. REQUIRED FOR OPTIONAL REFERENCE ENTHALPY CONTROL.
8. REQUIRED FOR OPTIONAL COMPARATIVE ENTHALPY CONTROL.
9. OPTIONAL MAS, RAS, RHS, OHS, AND ASSOCIATED WIRING NOT USED WITH MOTORIZED OUTSIDE AIR DAMPER.
10. (FUTURE) CONNECTIONS SHOWN ARE FOR 2-STAGE GAS HEAT OPERATION. WHEN 1-STAGE OPERATION IS REQUIRED, WIRE 123B IS NOT CONNECTED TO GV, AND WIRE 129A (IF PRESENT) IS CUT AND ISOLATED.
11. FUTURE PHASE MONITOR (PHM) CONNECTIONS ARE SHOWN. CONNECT ENDS OF WIRE 100AG TOGETHER (NOT USED). IF PHM IS NOT INSTALLED, WIRE 100L CONNECTS TO LTB-6. WIRES 100AF AND 101AR ARE NOT PRESENT.
12. HPC SHOWN IS 410A. FOR R22 REFRIGERANT (DIGIT 7 IN MODEL NUMBER EQUALS "A" OR "B") HPC1 WILL HAVE BLACK LEADS AND HPC2 WILL HAVE RED LEADS.