NOTES:

1. ALL WIRING AND DEVICES SHOWN DASHED TO BE SUPPLIED AND INSTALLED BY THE CUSTOMER IN ACCORDANCE WITH LOCAL AND NATIONAL ELECTRICAL CODES.
2. IF ANY OF THE ORIGINAL WIRE, AS SUPPLIED WITH THIS UNIT, MUST BE REPLACED, REPLACE IT WITH APPLIANCE WIRING MATERIAL RATED AT 105°C AND 600V.
3. THREE PHASE MOTORS ARE PROTECTED UNDER PRIMARY SINGLE PHASING CONDITIONS. ALL MOTORS HAVE INTERNAL OVERLOAD PROTECTION. COMPRESSORS HAVE INTERNAL THERMAL PROTECTION.
4. SEE COMM INTERFACE LITERATURE FOR SWITCH SETTINGS.
5. WHEN COMM INTERFACE IS INSTALLED, CONNECT CABLE FROM COMM J1 TO RTRM J4, AS SHOWN IN INSET A.
6. IF RTAM W/ COMM INTERFACE IS INSTALLED, CONNECT PPF34 TO J2 ON COMM INTERFACE. IF COMM INTERFACE IS NOT INSTALLED, CONNECT PPF34 TO J4 ON RTRM. SEE INSET B.
7. IF RTAM IS INSTALLED, CONNECT PPF5 TO J3 OF RTAM. IF COMM INTERFACE AND RTAM ARE NOT INSTALLED, CONNECT PPF5 TO J4 ON RTRM. SEE INSET C.
8. IF RTOM W/ ECA IS INSTALLED, CONNECT PPF8 TO J1 OF RTOM, PPM6 TO J2 OF RTOM AND PPF50 TO PPM50. IF ECA W/O RTOM IS INSTALLED CONNECT PPF8 TO PPF50. SEE INSET D.
9. IF RTAM IS INSTALLED, CONNECT PPF5 TO J3 OF RTAM, PPF34 TO J2 OF COMM BOARD. IF RTAM IS NOT INSTALLED CONNECT PPF5 TO J2 OF COMM BOARD. SEE INSET E.
10. REQUIRED FOR OPTIONAL REFERENCE ENTHALPY CONTROL.
11. REQUIRED FOR OPTIONAL COMPARATIVE ENTHALPY CONTROL.
12. OPTIONAL MAS, RAS, RHS, OHS AND ASSOCIATED WIRING NOT USED WITH MOTORIZED OUTSIDE AIR.
13. P11 FOR SINGLE ZONE AND MULTIZONE VAV. P12 FOR SINGLE ZONE VAV ONLY.
14. 2 SPEED FAN CONFIGURATION ONLY.

WIRE COLOR DESIGNATION

ABBR	COLOR	ABBR	COLOR
BK	BLACK	V (PR)	PURPLE
BL	BLUE	R	RED
BR	BROWN	TN	TAN
G	GREEN	W	WHITE
O	ORANGE	Y	YELLOW

IMPORTANT!
DO NOT ENERGIZE UNIT UNTIL CHECK-OUT AND START-UP PROCEDURE HAS BEEN COMPLETED.

TRANE
THIS DRAWING IS PROPRIETARY AND SHALL NOT BE COPIED OR ITS CONTENTS DISCLOSED TO OUTSIDE PARTIES WITHOUT THE CONSENT OF TRANE.

FILE NUMBER:	DRAWING NUMBER:	SHEET:	REV
2313-2047	2313-2055	1 OF 1	A

DRAWN BY: R. JOHNSON
TRANE® DATE: 12-FEB-13
REPLACES: --
REVISION DATE: --
CAD SYSTEM USED: Pro/DETAIL
SIMILAR TO: --

VOYAGER 2
DIAGRAM
CONNECTIONS - CONTROL MODULES
MODULATING GAS HEAT VARIABLE AIR VOLUME
65K SCCR

CAUTION
USE COPPER CONDUCTORS ONLY!
UNIT TERMINALS ARE NOT DESIGNED TO ACCEPT OTHER TYPES OF CONDUCTORS.
FAILURE TO DO SO MAY CAUSE DAMAGE TO THE EQUIPMENT.

PRECAUCIÓN
N'UTILISER QUE DES CONDUCTEURS EN CUIVRE!
LES BORNES DE L'UNITÉ NE SONT PAS CONÇUES POUR RECEVOIR D'AUTRES TYPES DE CONDUCTEURS.
L'UTILISATION DE TOUT AUTRE CONDUCTEUR PEUT ENDOMMAGER L'ÉQUIPEMENT.

ATTENTION
¡UTILICE ÚNICAMENTE CONDUCTORES DE COBRE!
LAS TERMINALES DE LA UNIDAD NO ESTÁN DISEÑADAS PARA ACEPTAR OTROS TIPOS DE CONDUCTORES.
SI NO LO HACE, PUEDE OCASIONAR DAÑO AL EQUIPO.

INDOOR SECTION

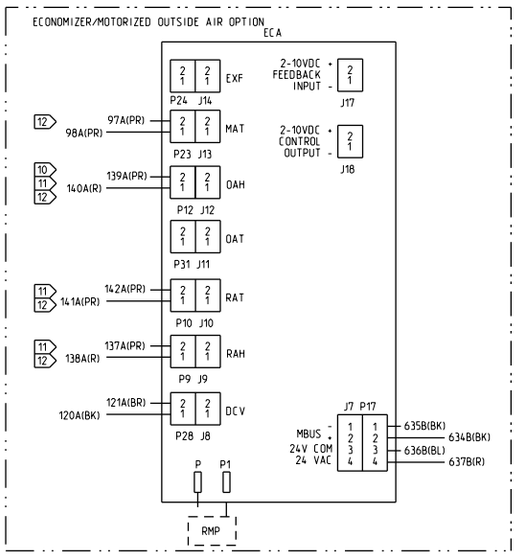

HEAT SECTION

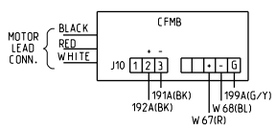
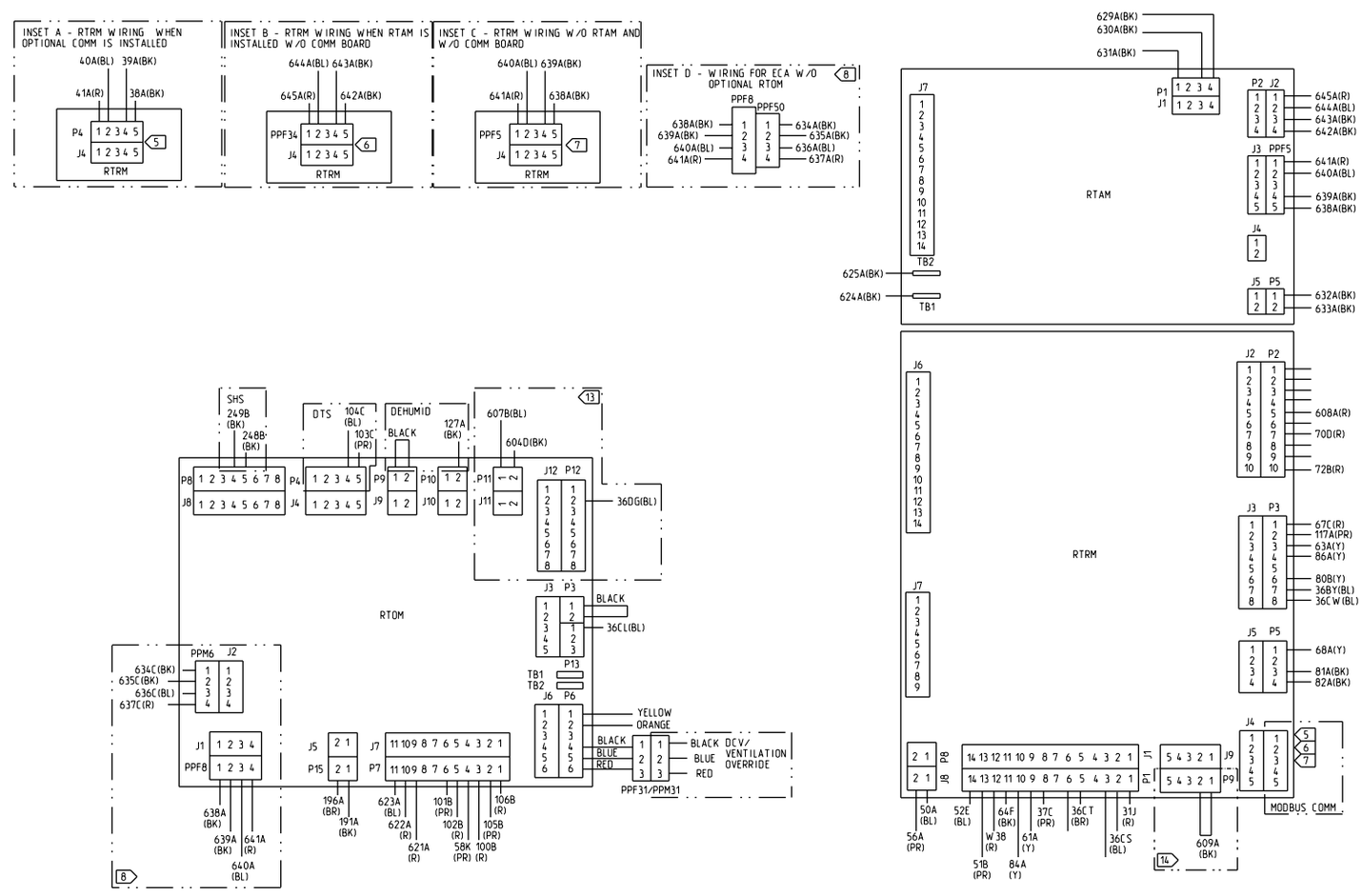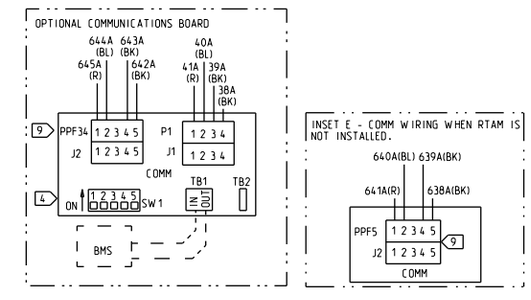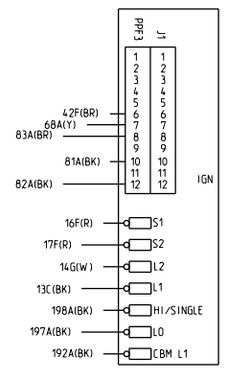
CONTROL BOX