NOTES:

1. ALL WIRING AND DEVICES SHOWN DASHED TO BE SUPPLIED AND INSTALLED BY THE CUSTOMER IN ACCORDANCE WITH LOCAL AND NATIONAL ELECTRICAL CODES.
2. IF ANY OF THE ORIGINAL WIRE, AS SUPPLIED WITH THIS UNIT, MUST BE REPLACED, REPLACE IT WITH APPLIANCE WIRING MATERIAL RATED AT 105°C AND 600V.
3. THREE PHASE MOTORS ARE PROTECTED UNDER PRIMARY SINGLE PHASING CONDITIONS. ALL MOTORS HAVE INTERNAL OVERLOAD PROTECTION. COMPRESSORS HAVE INTERNAL THERMAL PROTECTION.

4 CONNECTIONS SHOWN ARE FOR 460V/60HZ/3PH. WHEN 575V/60HZ/3PH OPERATION IS REQUIRED, REMOVE WIRES FROM 460V TERMINAL ON TNS1/TNS3 AND CONNECT TO 575V TERMINAL. SEE INSET A FOR 230V/60HZ/3PH CONNECTIONS.

5 CONNECTIONS SHOWN ARE FOR 460V/60HZ/3PH. WHEN 575V/60HZ/3PH OPERATION IS REQUIRED, REMOVE WIRES FROM H2 TERMINAL ON TNS2 AND CONNECT TO H3 TERMINAL. SEE INSET B FOR 230V/60HZ/3PH CONNECTIONS.

8 TO DISABLE COMPRESSORS. REMOVE JUMPERS AND CONNECT FIELD SUPPLIED CONTROL DEVICE.

9 TO SHUT DOWN THE UNIT FOR EMERGENCY STOP. REMOVE JUMPER AND INSTALL FIELD SUPPLIED DEVICE.

10 CONNECT WIRES 36BY AND 36CV TO ENABLE 3 STAGE COOLING ON HIGH EFFICIENCY SHORT ORIFICE UNITS ONLY.

11 WIRING SHOWN IS FOR UNITS WITH OPTIONAL DEHUMIDIFICATION ONLY. WHEN DEHUMIDIFICATION IS NOT REQUIRED LPC3, TIOR ARE NOT PRESENT. W8 (PR) IS CONNECTED TO LPC1.

15 ORANGE LEADS ARE FROM LPC3. (UNITS W/ DEHUMIDIFICATION ONLY)

16 DEHUMIDIFICATION ONLY.

IMPORTANT!

DO NOT ENERGIZE UNIT UNTIL CHECK-OUT AND START-UP PROCEDURE HAS BEEN COMPLETED.

WIRE COLOR DESIGNATION

ABBR	COLOR	ABBR	COLOR
BK	BLACK	V (PR)	PURPLE
BL	BLUE	R	RED
BR	BROWN	TN	TAN
G	GREEN	W	WHITE
O	ORANGE	Y	YELLOW

TRANE

THIS DRAWING IS PROPRIETARY AND SHALL NOT BE COPIED OR ITS CONTENTS DISCLOSED TO OUTSIDE PARTIES WITHOUT THE CONSENT OF TRANE.

DRAWN BY: R. JOHNSON	TRANE® DATE: 25-JAN-13
REPLACES: --	REVISION DATE: --
CAD SYSTEM USED: Pro/DETAIL	SIMILAR TO: --

FILE NUMBER:	DRAWING NUMBER:	SHEET:	REV
2313-2001	2313-2005	1 OF 1	B

VOYAGER 2
DIAGRAM
CONNECTION - CONTROL BOX
MODULATING GAS HEAT - CONSTANT VOLUME
65K SCCR

CAUTION

USE COPPER CONDUCTORS ONLY!

UNIT TERMINALS ARE NOT DESIGNED TO ACCEPT OTHER TYPES OF CONDUCTORS.

FAILURE TO DO SO MAY CAUSE DAMAGE TO THE EQUIPMENT.

PRECAUCIÓN

N'UTILISER QUE DES CONDUCTEURS EN CUIVRE!

LES BORNES DE L'UNITÉ NE SONT PAS CONÇUES POUR RECEVOIR D'AUTRES TYPES DE CONDUCTEURS.

L'UTILISATION DE TOUT AUTRE CONDUCTEUR PEUT ENDOMMAGER L'ÉQUIPEMENT.

ATTENTION

¡UTILICE ÚNICAMENTE CONDUCTORES DE COBRE!

LAS TERMINALES DE LA UNIDAD NO ESTÁN DISEÑADAS PARA ACEPTAR OTROS TIPOS DE CONDUCTORES.
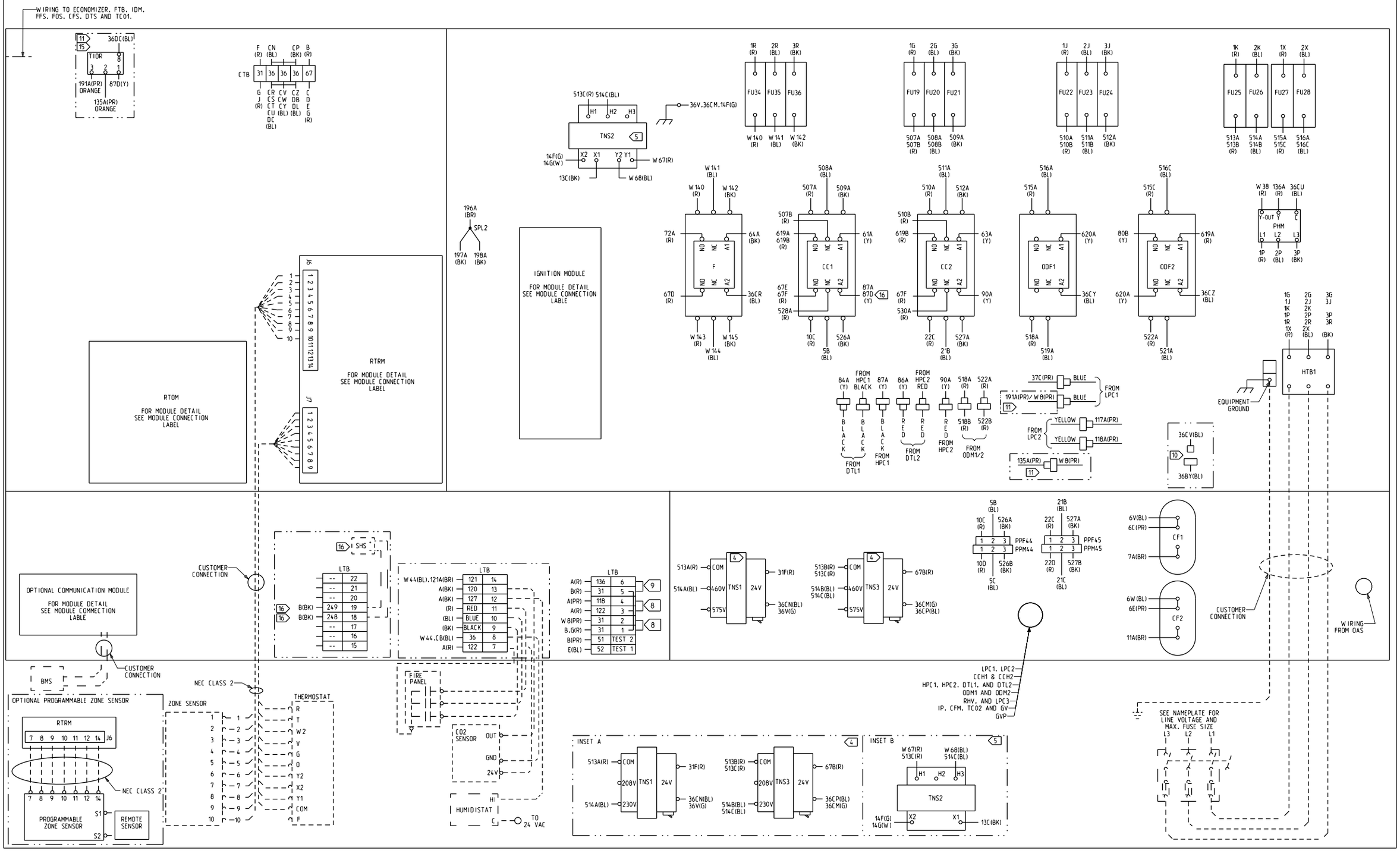
SI NO LO HACE, PUEDE OCASIONAR DAÑO AL EQUIPO.