TRANE	FILE NUMBER: 2313-1923	DRAWING NUMBER: 2313-1933	SHEET: 1 OF 1	REV B
THIS DRAWING IS PROPRIETARY AND SHALL NOT BE COPIED OR ITS CONTENTS DISCLOSED TO OUTSIDE PARTIES WITHOUT THE CONSENT OF TRANE.	DRAWN BY: K. EDWARDS	TRANE® DATE: 5/06/13	ROOFTOP PACKAGED AIR CONDITIONER DIAGRAM	
	REPLACES: --	REVISION DATE: 12/10/13	CONNECTION - RACEWAY DEVICES	
	CAD SYSTEM USED: Pro/DETAIL	SIMILAR TO: --	40-70T W/ VARI SPEED COMPR & SUP & EXH/RTN V.F.D. CONNECTION 3 OF 3	

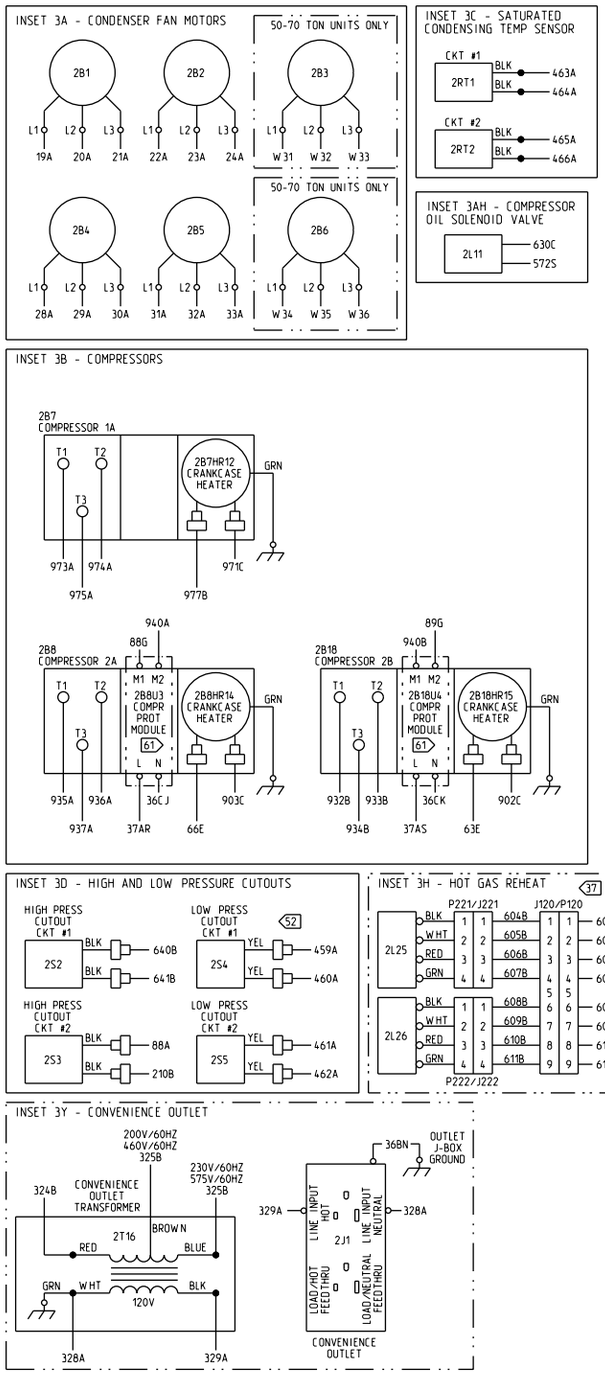

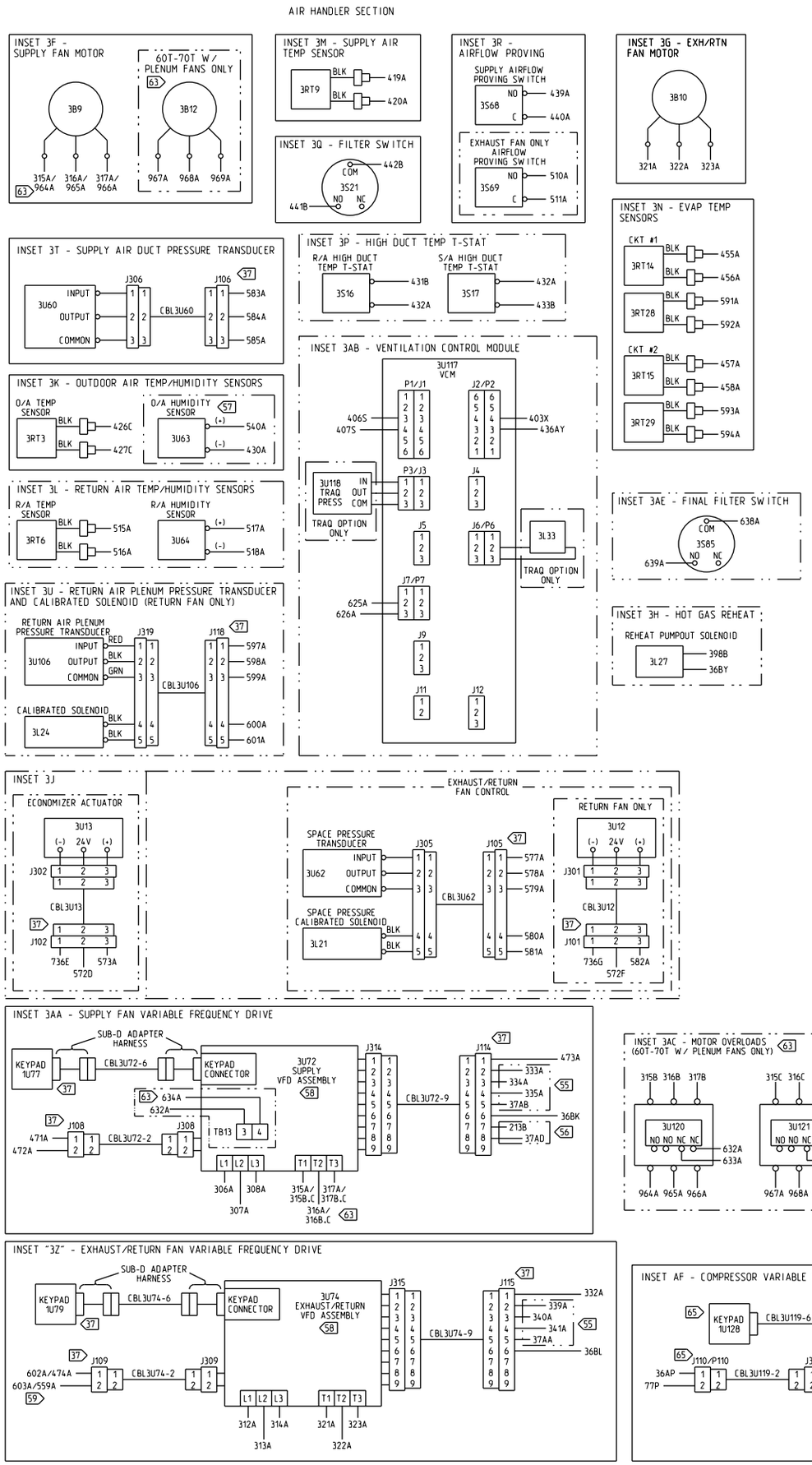

DEVICE PREFIX LOCATION CODE	
AREA	LOCATION
1	INSIDE UNIT CONTROL BOX
2	CONDENSER SECTION
3	AIR HANDLER SECTION
4	HEATING SECTION
5	EXTERNAL FIELD MOUNTED DEVICE

NOTES:

37 PLUGS J101. J102. J105. J106. J108. J109. J114. J115. J116. J117. J118 AND J120 & VFD KEYPADS 1U77 AND 1U79 LOCATED IN MAIN CONTROL PANEL.

52 2S4 & 2S5 ARE LOW PRESSURE CUTOUT SWITCHES USED FOR COMPRESSOR PROTECTION (25 PSIG). CAUTION !! DO NOT JUMPER ACROSS SWITCH UNDER ANY CIRCUMSTANCE.

55 WIRES REQUIRED ONLY FOR V.F.D. WITH BYPASS OPTION.

56 WIRES 213B & 37AD REQUIRED ONLY ON UNITS WITH GAS OR ELECTRIC HEAT.

57 3U63 AND ASSOCIATED WIRING USED ON REFERENCE ENTHALPY AND COMPARATIVE ENTHALPY OPTIONS.

58 SEE APPLICABLE VARIABLE FREQUENCY DRIVE DIAGRAM FOR BALANCE OF CIRCUIT.

59 WIRES 474A & 559A ARE FOR EXHAUST FAN OPTION ONLY. WIRES 602A & 603A ARE FOR RETURN FAN OPTION ONLY.

61 COMPR PROTECTION MODULES 2B8U3 AND 2B18U4 & ASSOCIATED WIRING ARE REQUIRED FOR 70 TON UNITS ONLY.

63 MOTOR 3B12. OVERLOADS 3U120 AND 3U121. AND WIRES 315B. 315C. 316B. 316C. 317B. 317C. 632A. 633A. 634A. 964A. 965A. 966A. 967A. 968A AND 969A ARE USED ON 60T-70T UNITS WITH PLENUM FANS ONLY.

64 COOLING MOTOR 3B23 USED ON 208/230 VAC UNITS ONLY.
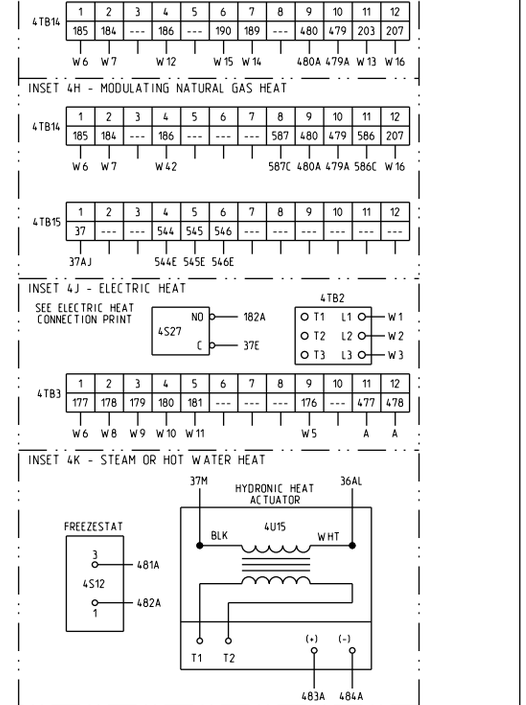
65 PLUGS J110. J111 & VFD KEYPAD 1U128 LOCATED IN MAIN CONTROL PANEL.