TRANE	FILE NUMBER: 2313-1923	DRAWING NUMBER: 2313-1929	SHEET: 1 OF 1	REV B
THIS DRAWING IS PROPRIETARY AND SHALL NOT BE COPIED OR ITS CONTENTS DISCLOSED TO OUTSIDE PARTIES WITHOUT THE CONSENT OF TRANE.	DRAWN BY: K. EDWARDS	TRANE® DATE: 5/06/13	ROOFTOP PACKAGED AIR CONDITIONER DIAGRAM	
	REPLACES: 2307-9172-G	REVISION DATE: 12/10/13	CONNECTION - RACEWAY DEVICES RT 40-75 TON W/ SUPPLY FAN V.F.D. CONNECTION 3 OF 3	
	CAD SYSTEM USED: Pro/DETAIL	SIMILAR TO: --		

DEVICE PREFIX LOCATION CODE	
AREA	LOCATION
1	INSIDE UNIT CONTROL BOX
2	CONDENSER SECTION
3	AIR HANDLER SECTION
4	HEATING SECTION
5	EXTERNAL FIELD MOUNTED DEVICE

NOTES:

37 PLUGS J101, J102, J105, J106, J114, J116, J117 AND J120 & VFD KEYPAD 1U77 LOCATED IN MAIN CONTROL PANEL.

52 2S4 & 2S5 ARE LOW PRESSURE CUTOUT SWITCHES USED FOR COMPRESSOR PROTECTION (25 PSIG). CAUTION !! DO NOT JUMPER ACROSS SWITCH UNDER ANY CIRCUMSTANCE.

55 WIRES REQUIRED ONLY FOR V.F.D. WITH BYPASS OPTION.

56 WIRES 213B & 37AD REQUIRED ONLY ON UNITS WITH GAS OR ELECTRIC HEAT.

57 3U63 AND ASSOCIATED WIRING USED ON REFERENCE ENTHALPY AND COMPARATIVE ENTHALPY OPTIONS.

58 SEE APPLICABLE VARIABLE FREQUENCY DRIVE DIAGRAM FOR BALANCE OF CIRCUIT.

61 COMPR PROTECTION MODULES 2B7U1, 2B17U2, 2B8U3 AND 2B18U4 & ASSOCIATED WIRING ARE REQUIRED FOR 75 TON UNITS ONLY.

63 MOTOR 3B12, OVERLOADS 3U120 AND 3U121, AND WIRES 315B, 315C, 316B, 316C, 317B, 317C, 632A, 633A, 634A, 964A, 965A, 966A, 967A, 968A AND 969A ARE USED ON 60T-75T UNITS WITH PLENUM FANS ONLY.

CONDENSING SECTION

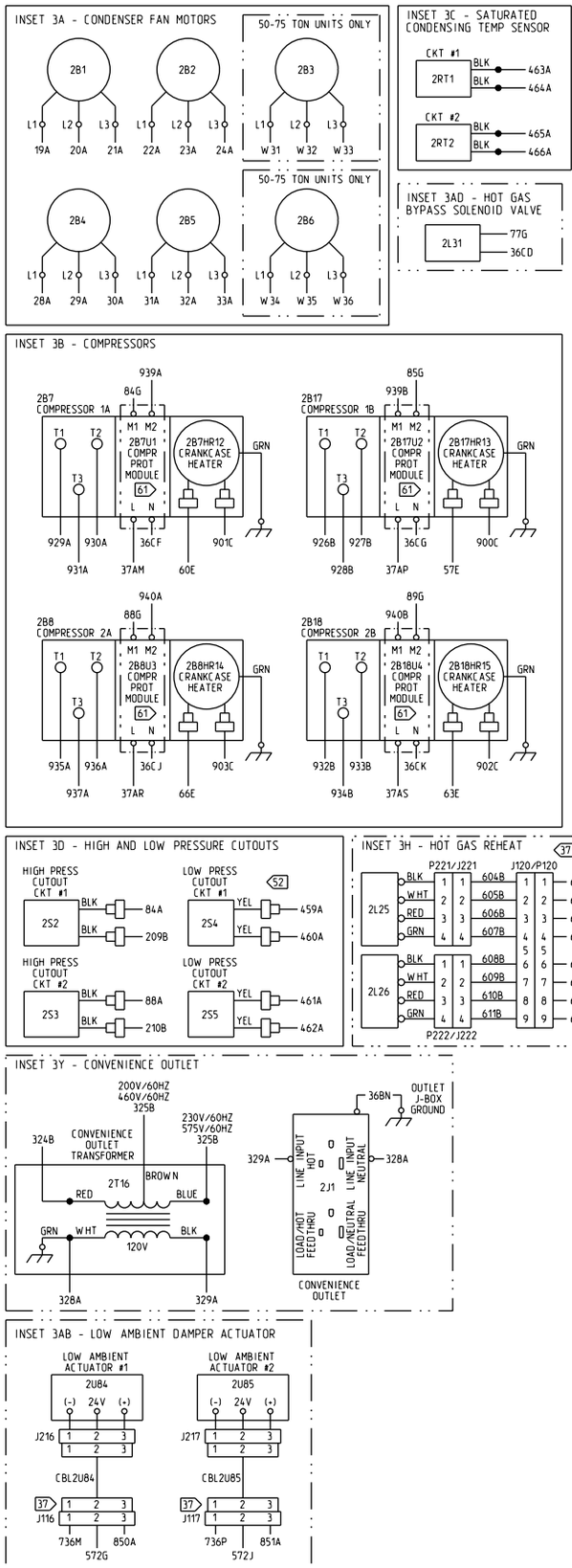

AIR HANDLER SECTION

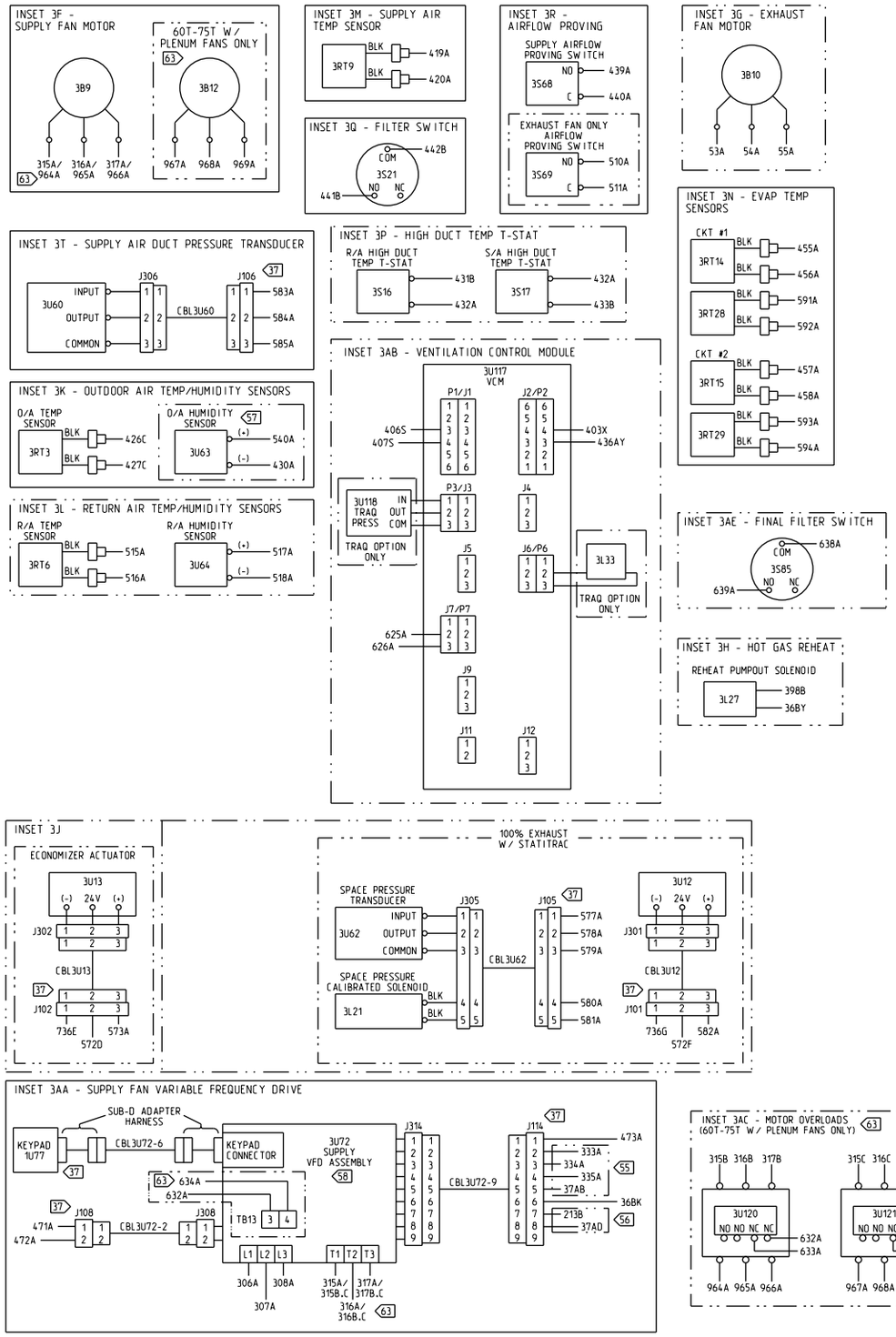
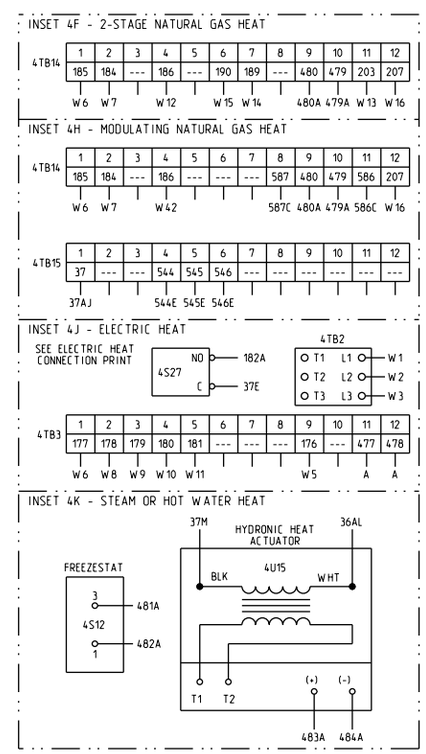
HEAT SECTION