TRANE	FILE NUMBER: 2313-1923	DRAWING NUMBER: 2313-1926	SHEET: 1 OF 1	REV B
THIS DRAWING IS PROPRIETARY AND SHALL NOT BE COPIED OR ITS CONTENTS DISCLOSED TO OUTSIDE PARTIES WITHOUT THE CONSENT OF TRANE.	DRAWN BY: K. EDWARDS	TRANE® DATE: 5/06/13	ROOFTOP PACKAGED AIR CONDITIONER DIAGRAM	
	REPLACES: 2313-1019A	REVISION DATE: 12/11/13	CONNECTION - RACEWAY DEVICES	
	CAD SYSTEM USED: Pro/DETAIL	SIMILAR TO: --	RT 20-30 TON W/ EXHAUST/RETURN FAN V.F.D. CONNECTION 3 OF 3	

CONDENSING SECTION

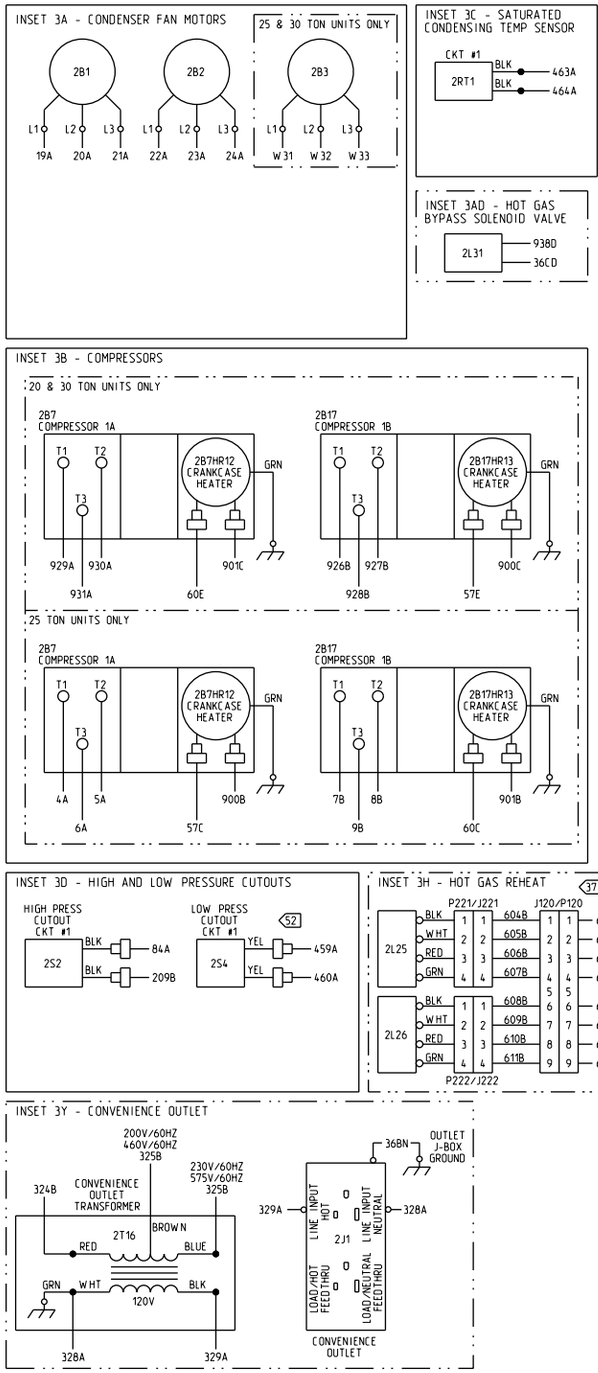

AIR HANDLER SECTION

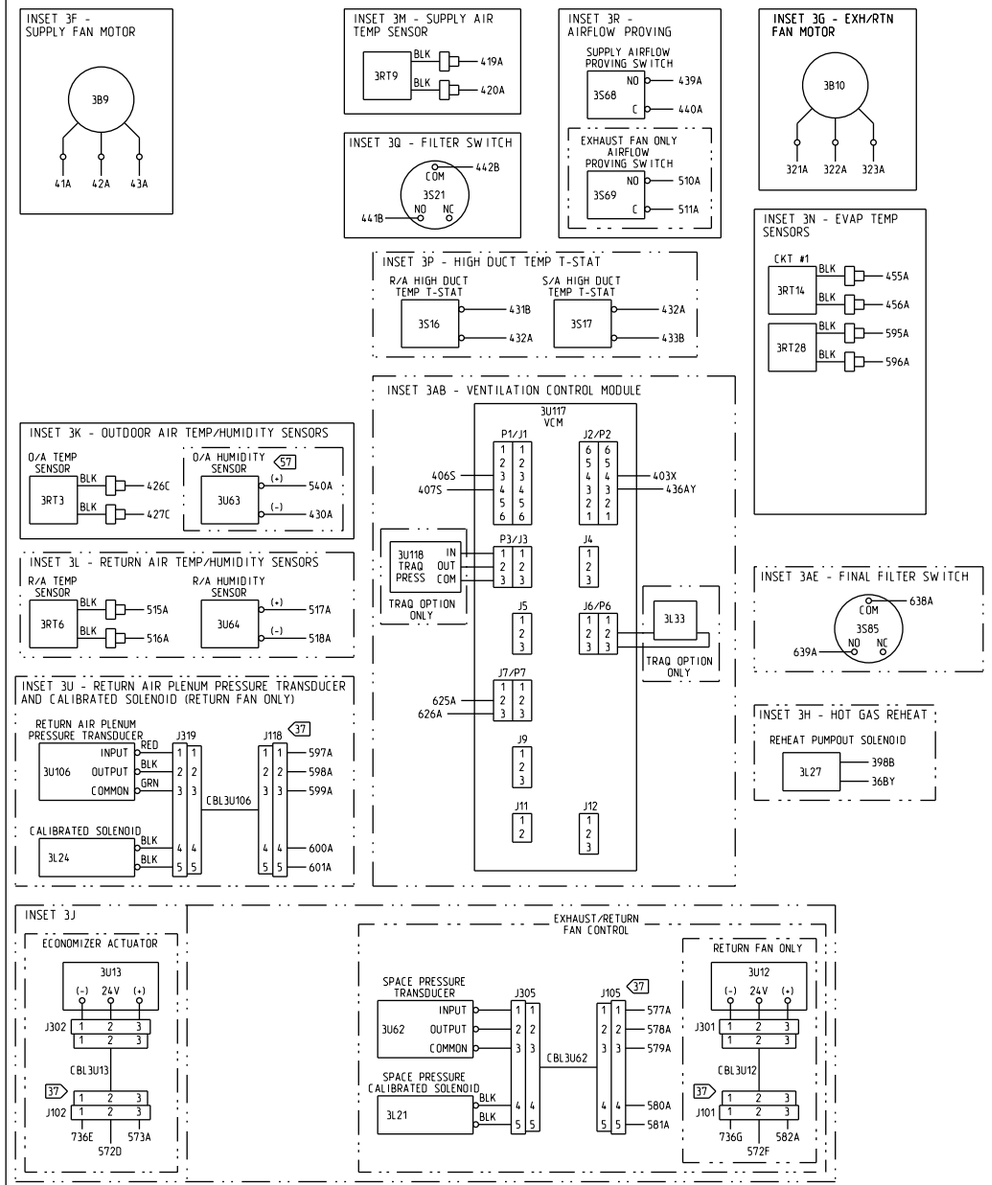

DEVICE PREFIX LOCATION CODE	
AREA	LOCATION
1	INSIDE UNIT CONTROL BOX
2	CONDENSER SECTION
3	AIR HANDLER SECTION
4	HEATING SECTION
5	EXTERNAL FIELD MOUNTED DEVICE

NOTES:

37 PLUGS J101, J102, J105, J109, J115, J116, J118 AND J120 & VFD KEYPAD 1U79 LOCATED IN MAIN CONTROL PANEL.

52 2S4 IS A LOW PRESSURE CUTOUT SWITCH USED FOR COMPRESSOR PROTECTION (25 PSIG). CAUTION !! DO NOT JUMPER ACROSS SWITCH UNDER ANY CIRCUMSTANCE.

55 WIRES REQUIRED ONLY FOR V.F.D. WITH BYPASS OPTION.

57 3U63 AND ASSOCIATED WIRING USED ON REFERENCE ENTHALPY AND COMPARATIVE ENTHALPY OPTIONS.

58 SEE APPLICABLE VARIABLE FREQUENCY DRIVE DIAGRAM FOR BALANCE OF CIRCUIT.

59 WIRES 474A & 559A ARE FOR EXHAUST FAN OPTION ONLY. WIRES 602A & 603A ARE FOR RETURN FAN OPTION ONLY.
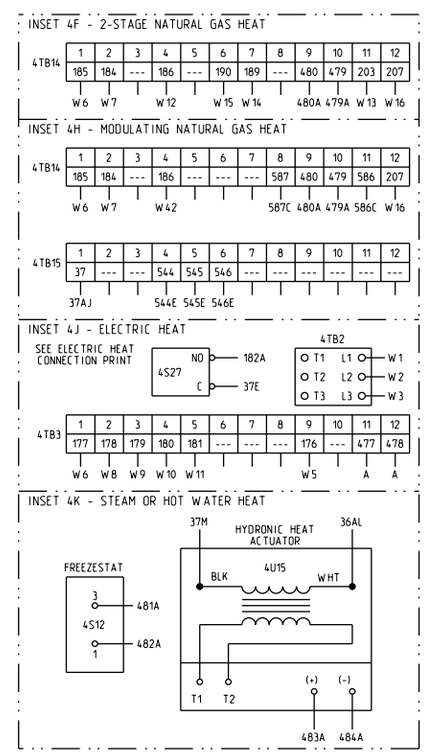
HEAT SECTION