TRANE	FILE NUMBER: 2313-1913	DRAWING NUMBER: 2313-1916	SHEET: 1 OF 1	REV A
THIS DRAWING IS PROPRIETARY AND SHALL NOT BE COPIED OR ITS CONTENTS DISCLOSED TO OUTSIDE PARTIES WITHOUT THE CONSENT OF TRANE.	DRAWN BY: K. EDWARDS	TRANE® DATE: 5/04/13	ROOFTOP PACKAGED AIR CONDITIONER DIAGRAM	
	REPLACES: 2313-1165A	REVISION DATE: --	CONNECTIONS - COMMON CONTROL MODULES W/ EXHAUST FAN VARIABLE FREQUENCY DRIVE 90-130 TON - CONNECTION 2 OF 3	
	CAD SYSTEM USED: Pro/DETAIL	SIMILAR TO: --		

NOTES:

21 WIRE NO'S 540A & 430A REQUIRED WITH REFERENCE ENTHALPY AND COMPARATIVE ENTHALPY OPTIONS ONLY.

23 REFER TO DETAILS "2A", "2B", "2C" AND "2D" FOR CORRECT HEAT MODULE (1U50) CONNECTIONS.
DETAIL "2A" - ELECTRIC HEAT
DETAIL "2B" - 2-STAGE NATURAL GAS HEAT
DETAIL "2C" - STEAM OR HOT WATER HEAT
DETAIL "2D" - MODULATING NATURAL GAS HEAT

26 WIRE NO'S 515A, 516A, 517A & 518A REQUIRED WITH COMPARATIVE ENTHALPY OPTION ONLY.

29 CONFIGURATION MODULE 1U116 ONLY AVAILABLE ON GBAS 0-5V WHEN SINGLE ZONE VAV AND/OR RAPID RESTART IS INSTALLED.
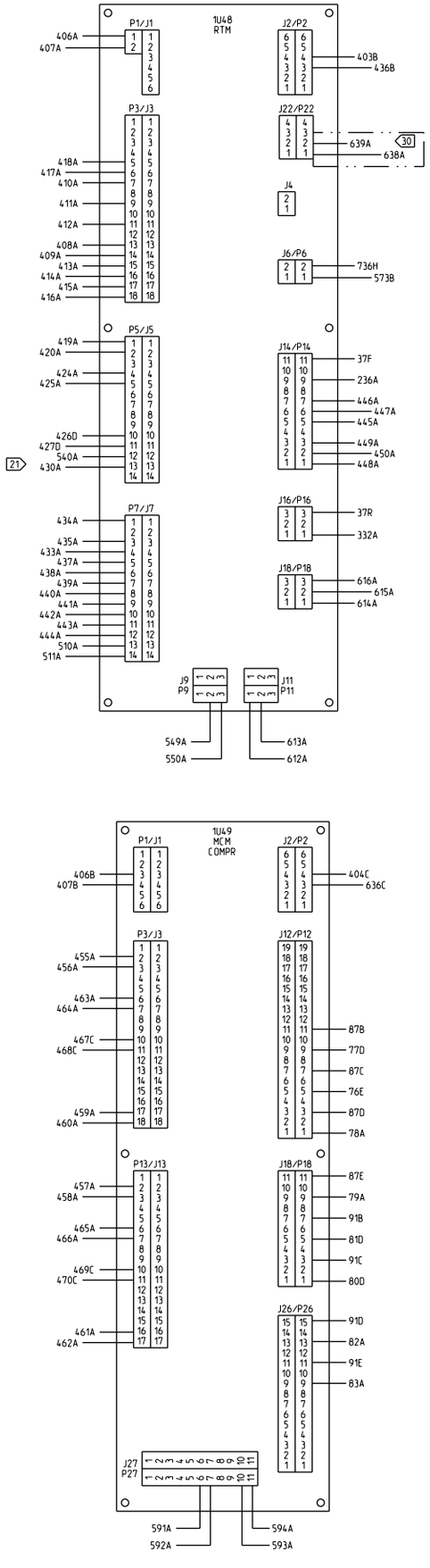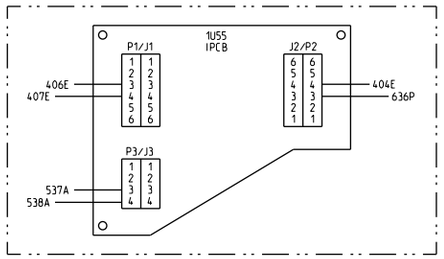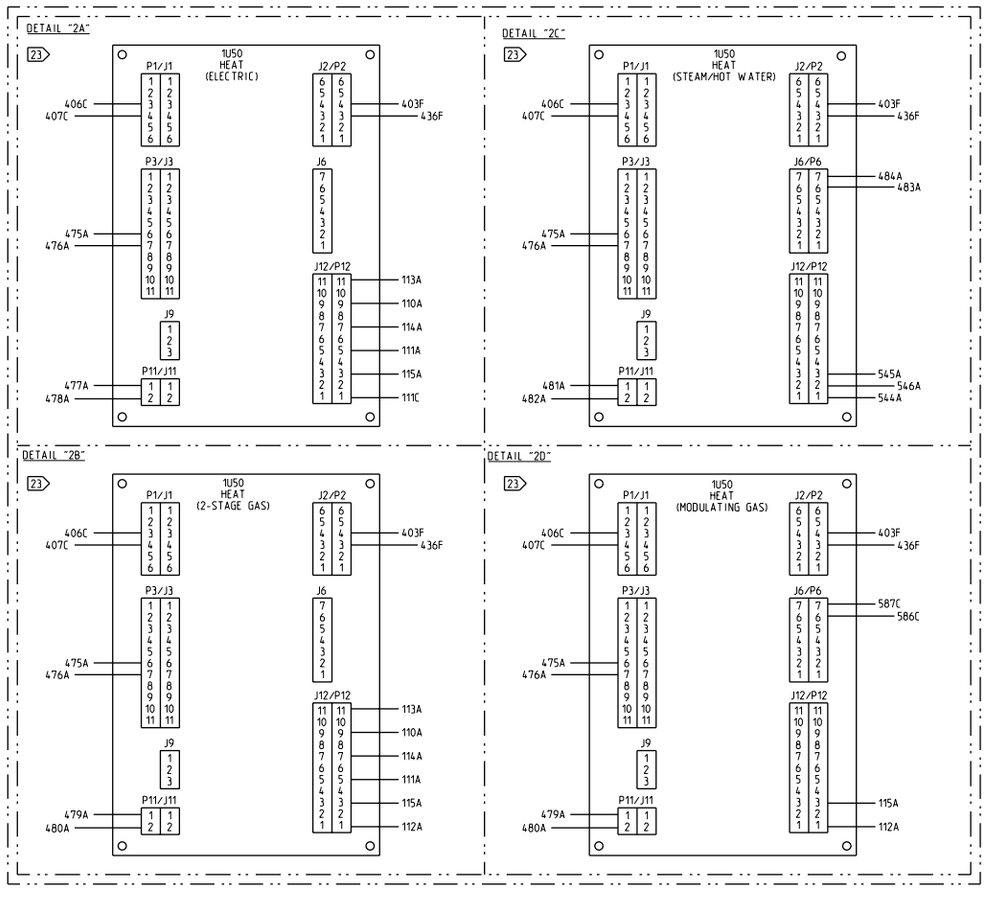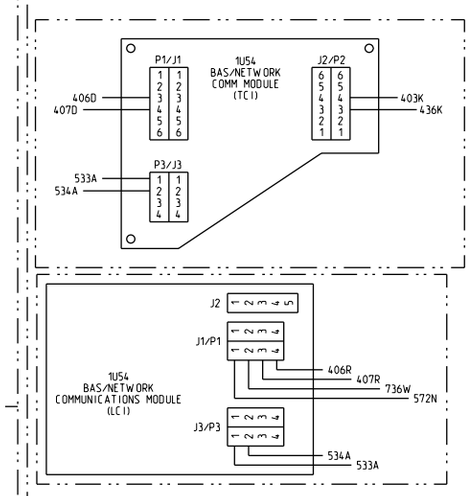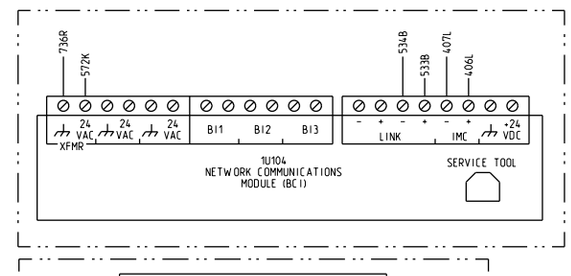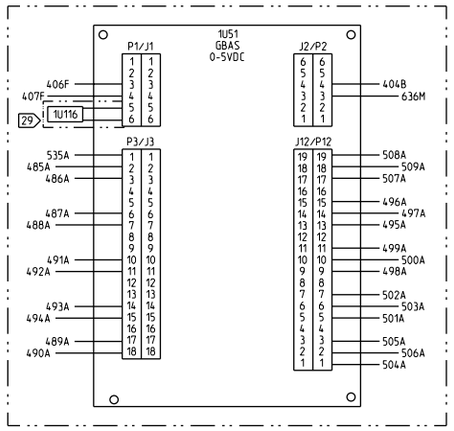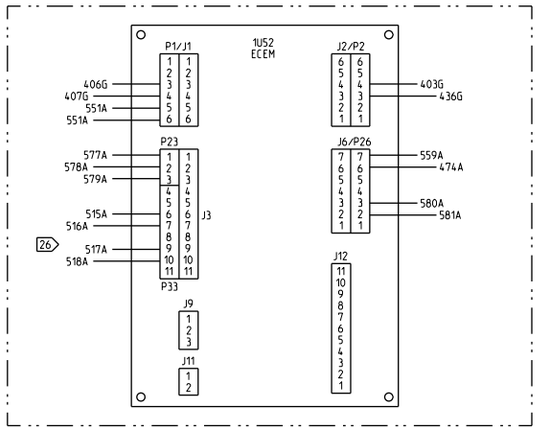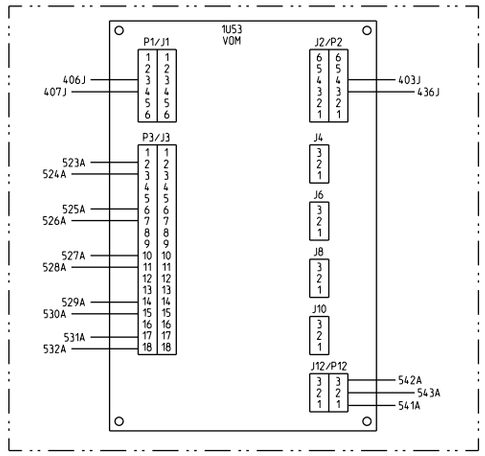
30 CONNECTIONS PRESENT WHEN CONFIGURED FOR OPTIONAL FINAL FILTER ONLY.