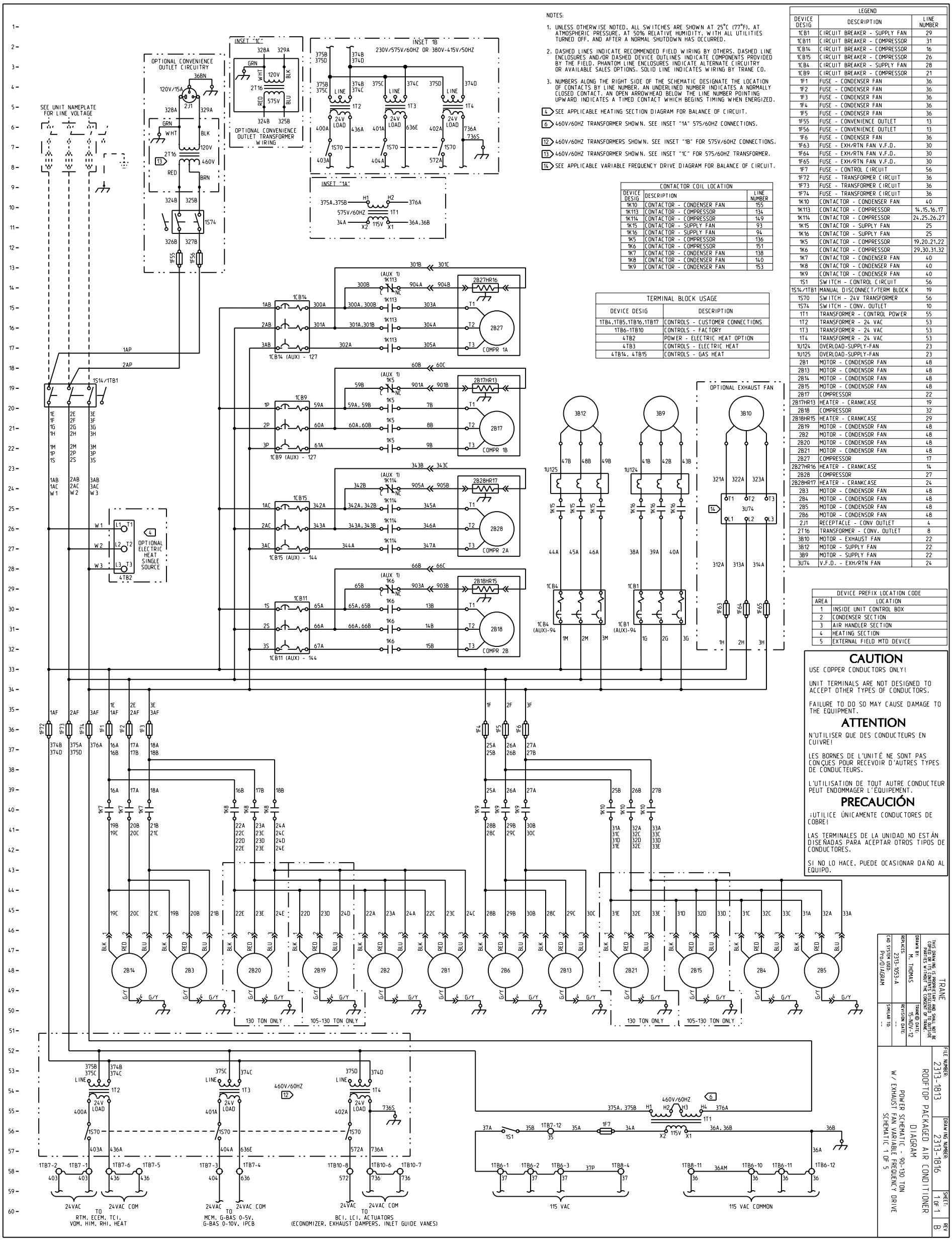

NOTES:

1. UNLESS OTHERWISE NOTED, ALL SWITCHES ARE SHOWN AT 25°C (77°F), AT ATMOSPHERIC PRESSURE, AT 50% RELATIVE HUMIDITY, WITH ALL UTILITIES TURNED OFF, AND AFTER A NORMAL SHUTDOWN HAS OCCURRED.
2. DASHED LINES INDICATE RECOMMENDED FIELD WIRING BY OTHERS. DASHED LINE ENCLOSURES AND/OR DASHED DEVICE OUTLINES INDICATE COMPONENTS PROVIDED BY THE FIELD. PHANTOM LINE ENCLOSURES INDICATE ALTERNATE CIRCUITRY OR AVAILABLE SALES OPTIONS. SOLID LINE INDICATES WIRING BY TRANE CO.
3. NUMBERS ALONG THE RIGHT SIDE OF THE SCHEMATIC DESIGNATE THE LOCATION OF CONTACTS BY LINE NUMBER. AN UNDERLINED NUMBER INDICATES A NORMALLY CLOSED CONTACT. AN OPEN ARROWHEAD BELOW THE LINE NUMBER POINTING UPWARD INDICATES A TIMED CONTACT WHICH BEGINS TIMING WHEN ENERGIZED.

4 SEE APPLICABLE HEATING SECTION DIAGRAM FOR BALANCE OF CIRCUIT.

6 460V/60HZ TRANSFORMER SHOWN. SEE INSET "1A" 575/60HZ CONNECTIONS.

12 460V/60HZ TRANSFORMERS SHOWN. SEE INSET "1B" FOR 575V/60HZ CONNECTIONS.

13 460V/60HZ TRANSFORMER SHOWN. SEE INSET "1C" FOR 575/60HZ TRANSFORMER.

14 SEE APPLICABLE VARIABLE FREQUENCY DRIVE DIAGRAM FOR BALANCE OF CIRCUIT.

CONTACTOR COIL LOCATION		
DEVICE DESIG	DESCRIPTION	LINE NUMBER
1K10	CONTACTOR - CONDENSER FAN	155
1K113	CONTACTOR - COMPRESSOR	134
1K114	CONTACTOR - COMPRESSOR	149
1K15	CONTACTOR - SUPPLY FAN	93
1K16	CONTACTOR - SUPPLY FAN	94
1K5	CONTACTOR - COMPRESSOR	136
1K6	CONTACTOR - COMPRESSOR	151
1K7	CONTACTOR - CONDENSER FAN	138
1K8	CONTACTOR - CONDENSER FAN	140
1K9	CONTACTOR - CONDENSER FAN	153

TERMINAL BLOCK USAGE	
DEVICE DESIG	DESCRIPTION
1TB4.1TB5.1TB16.1TB17	CONTROLS - CUSTOMER CONNECTIONS
1TB6-1TB10	CONTROLS - FACTORY
4TB2	POWER - ELECTRIC HEAT OPTION
4TB3	CONTROLS - ELECTRIC HEAT
4TB14. 4TB15	CONTROLS - GAS HEAT

LEGEND		
DEVICE DESIG	DESCRIPTION	LINE NUMBER
1CB1	CIRCUIT BREAKER - SUPPLY FAN	29
1CB11	CIRCUIT BREAKER - COMPRESSOR	31
1CB14	CIRCUIT BREAKER - COMPRESSOR	16
1CB15	CIRCUIT BREAKER - COMPRESSOR	26
1CB4	CIRCUIT BREAKER - SUPPLY FAN	28
1CB9	CIRCUIT BREAKER - COMPRESSOR	21
1F1	FUSE - CONDENSER FAN	36
1F2	FUSE - CONDENSER FAN	36
1F3	FUSE - CONDENSER FAN	36
1F4	FUSE - CONDENSER FAN	36
1F5	FUSE - CONDENSER FAN	36
1F55	FUSE - CONVENIENCE OUTLET	13
1F56	FUSE - CONVENIENCE OUTLET	13
1F6	FUSE - CONDENSER FAN	36
1F63	FUSE - EXH/RTN FAN V.F.D.	30
1F64	FUSE - EXH/RTN FAN V.F.D.	30
1F65	FUSE - EXH/RTN FAN V.F.D.	30
1F7	FUSE - CONTROL CIRCUIT	56
1F72	FUSE - TRANSFORMER CIRCUIT	36
1F73	FUSE - TRANSFORMER CIRCUIT	36
1F74	FUSE - TRANSFORMER CIRCUIT	36
1K10	CONTACTOR - CONDENSER FAN	40
1K113	CONTACTOR - COMPRESSOR	14.15.16.17
1K114	CONTACTOR - COMPRESSOR	24.25.26.27
1K15	CONTACTOR - SUPPLY FAN	25
1K16	CONTACTOR - SUPPLY FAN	25
1K5	CONTACTOR - COMPRESSOR	19.20.21.22
1K6	CONTACTOR - COMPRESSOR	29.30.31.32
1K7	CONTACTOR - CONDENSER FAN	40
1K8	CONTACTOR - CONDENSER FAN	40
1K9	CONTACTOR - CONDENSER FAN	40
1S1	SWITCH - CONTROL CIRCUIT	56
1S14/1TB1	MANUAL DISCONNECT/TERM BLOCK	19
1S70	SWITCH - 24V TRANSFORMER	56
1S74	SWITCH - CONV. OUTLET	10
1T1	TRANSFORMER - CONTROL POWER	55
1T2	TRANSFORMER - 24 VAC	53
1T3	TRANSFORMER - 24 VAC	53
1T4	TRANSFORMER - 24 VAC	53
1U124	OVERLOAD-SUPPLY-FAN	23
1U125	OVERLOAD-SUPPLY-FAN	23
2B1	MOTOR - CONDENSOR FAN	48
2B13	MOTOR - CONDENSOR FAN	48
2B14	MOTOR - CONDENSOR FAN	48
2B15	MOTOR - CONDENSOR FAN	48
2B17	COMPRESSOR	22
2B17HR13	HEATER - CRANKCASE	19
2B18	COMPRESSOR	32
2B18HR15	HEATER - CRANKCASE	29
2B19	MOTOR - CONDENSOR FAN	48
2B2	MOTOR - CONDENSOR FAN	48
2B20	MOTOR - CONDENSOR FAN	48
2B21	MOTOR - CONDENSOR FAN	48
2B27	COMPRESSOR	17
2B27HR16	HEATER - CRANKCASE	14
2B28	COMPRESSOR	27
2B28HR17	HEATER - CRANKCASE	24
2B3	MOTOR - CONDENSOR FAN	48
2B4	MOTOR - CONDENSOR FAN	48
2B5	MOTOR - CONDENSOR FAN	48
2B6	MOTOR - CONDENSOR FAN	48
2J1	RECEPTACLE - CONV OUTLET	4
2T16	TRANSFORMER - CONV. OUTLET	8
3B10	MOTOR - EXHAUST FAN	22
3B12	MOTOR - SUPPLY FAN	22
3B9	MOTOR - SUPPLY FAN	22
3U74	V.F.D. - EXH/RTN FAN	24

DEVICE PREFIX LOCATION CODE	
AREA	LOCATION
1	INSIDE UNIT CONTROL BOX
2	CONDENSER SECTION
3	AIR HANDLER SECTION
4	HEATING SECTION
5	EXTERNAL FIELD MTD DEVICE

CAUTION

USE COPPER CONDUCTORS ONLY!

UNIT TERMINALS ARE NOT DESIGNED TO ACCEPT OTHER TYPES OF CONDUCTORS.

FAILURE TO DO SO MAY CAUSE DAMAGE TO THE EQUIPMENT.

ATTENTION

N'UTILISER QUE DES CONDUCTEURS EN CUIVRE!

LES BORNES DE L'UNITÉ NE SONT PAS CONÇUES POUR RECEVOIR D'AUTRES TYPES DE CONDUCTEURS.

L'UTILISATION DE TOUT AUTRE CONDUCTEUR PEUT ENDOMMAGER L'ÉQUIPEMENT.

PRECAUCIÓN

¡UTILICE ÚNICAMENTE CONDUCTORES DE COBRE!

LAS TERMINALES DE LA UNIDAD NO ESTÁN DISEÑADAS PARA ACEPTAR OTROS TIPOS DE CONDUCTORES.

SI NO LO HACE, PUEDE OCASIONAR DAÑO AL EQUIPO.

TRANE

THIS DRAWING IS PROPRIETARY AND SHALL NOT BE REPRODUCED OR COPIED IN WHOLE OR IN PARTS WITHOUT THE CONSENT OF TRANE.

DRAWN BY: M. THOMAS
TRANE® DATE: 15-NOV-12
REPLACES: 2313-1053-A
REVISION DATE:
CAD SYSTEM USED: Pro/DIAGRAM
SIMILAR TO: --

FILE NUMBER: 2313-1813
ROOFTOP PACKAGED AIR CONDITIONER DIAGRAM
POWER SCHEMATIC - 90-130 TON W/ EXHAUST FAN VARIABLE FREQUENCY DRIVE SCHEMATIC 1 OF 5

DRAWING NUMBER: 2313-1816
SHEET: 1 OF 1
REV: B