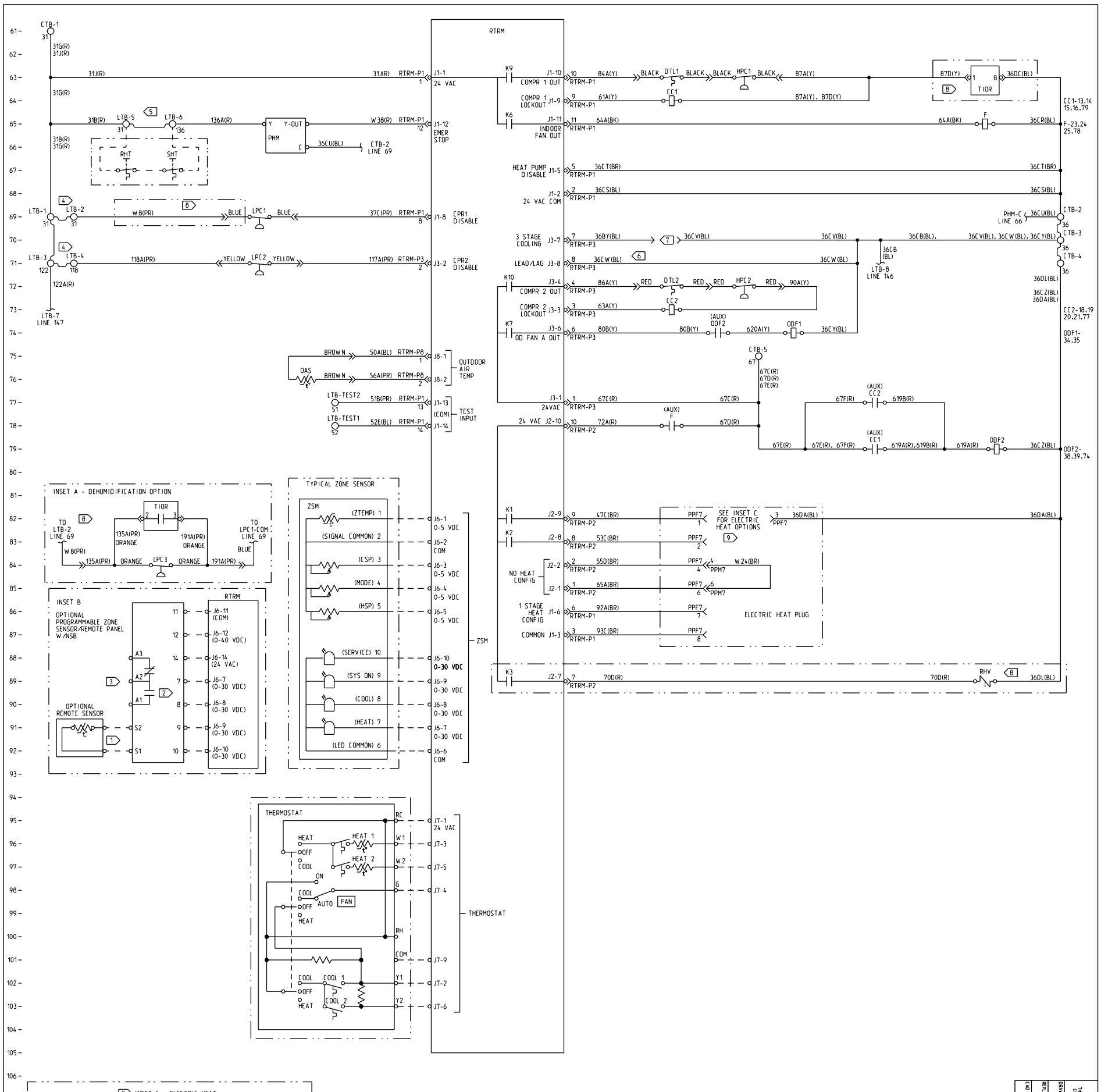

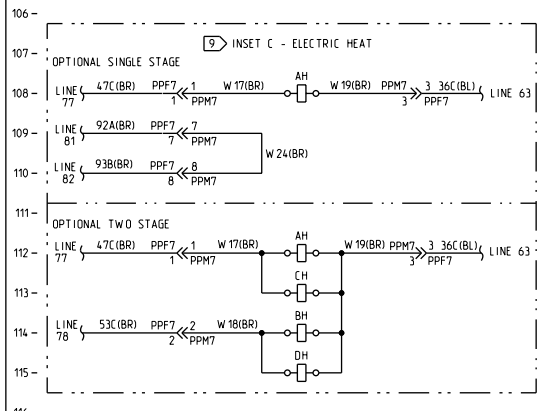

117 - 1 INSTALL OPTIONAL REMOTE SENSOR TO TERMINALS S1 AND S2 WHEN REQUIRED. SEE PROGRAMMABLE ZONE SENSOR/REMOTE PANEL WITH NSB LITERATURE FOR OPTIONAL CONFIGURATION.

118 - 2 TERMINALS 7, 8, 9, AND 10 ARE FOR OPTIONAL INDICATORS.

119 - 3 AUXILIARY RELAY ENERGIZED DURING OCCUPIED PERIODS.

120 - 4 TO DISABLE COMPRESSORS, REMOVE JUMPERS BETWEEN LTB-1 AND LTB-2 AND BETWEEN LTB-3 AND LTB-4 AND CONNECT FIELD SUPPLIED CONTROL DEVICE.

5 TO SHUT DOWN THE UNIT FOR EMERGENCY STOP. REMOVE JUMPER BETWEEN LTB-5 AND LTB-6 AND INSTALL FIELD SUPPLIED DEVICE.

6 TO ENABLE COMPRESSOR LEAD/LAG OPERATION CUT WIRE 36CW(BL).

7 CONNECT WIRES 36BY(BL) AND 36CV(BL) TO ENABLE 3 STAGE COOLING.

8 WHEN OPTIONAL DEHUMIDIFICATION IS REQUIRED. CONNECT TIOR AS SHOWN IN INSET A. CONNECT REHEAT VALVE (RHV) AS SHOWN.

9 SEE APPLICABLE HEATING SECTION DIAGRAM FOR BALANCE OF CIRCUIT WHEN OPTIONAL ELECTRIC HEAT IS REQUIRED. HEAT CONTACTORS AND ASSOCIATED WIRING USED WITH THE FOLLOWING ELECTRIC HEAT OPTIONS:

CONTACTOR	ELECTRIC HEAT OPTION
AH	ALL
BH	36, 54 AND 72 KW
CH	54 AND 72 KW
DH	72 KW

LEGEND

DEVICE DESIG	DESCRIPTION	LINE NUMBER
CC1	CONTACTOR - COMPRESSOR	64.79
CC2	CONTACTOR - COMPRESSOR	73.77
DTL1	SWITCH - DISCHARGE TEMP LIMIT	63
DTL2	SWITCH - DISCHARGE TEMP LIMIT	72
F	CONTACTOR - INDOOR FAN	65.78
HPC1	SWITCH - HIGH PRESSURE	63
HPC2	SWITCH - HIGH PRESSURE	72
LPC1	SWITCH - LOW PRESSURE	69
LPC2	SWITCH - LOW PRESSURE	71
LPC3	SWITCH - LOW PRESSURE	84
OAS	SENSOR - OUTDOOR AIR TEMP	76
ODF1	CONTACTOR - OUTDOOR FAN	74
ODF2	CONTACTOR - OUTDOOR FAN	74,79
PHM	MODULE - PHASE MONITOR	65
RHT	SWITCH - RETURN HIGH TEMPERATURE	67
RHV	VAVLE - REHEAT	89
RTRM	MODULE - RELIATEL REGRIGERATION	61
SHT	SWITCH - SUPPLY HIGH TEMPERATURE	67
TIOR	MODULE - TIMED OVERRIDE	63,82
ZSM	MODULE - ZONE SENSOR	82

THIS DRAWING IS PROPRIETARY AND SHALL NOT BE COPIED OR TRANSFERRED TO OUTSIDE PARTIES WITHOUT THE CONSENT OF TRANE

TRANE

DRAWN BY: B.WALDEN
TRANE® DATE: 25-Jan-13
REPLACES: --
REVISION DATE: --
CAD SYSTEM USED: Pro/DIAGRAM
SIMILAR TO: --

CONTROL SCHEMATIC
RELIATEL REFRIGERATION
CONSTANT VOLUME - COOLING ONLY

VOYAGER 2
DIAGRAM

FILE NUMBER: 2313-1581
DRAWING NUMBER: 2313-1582
SHEET: 1 OF 1
REV: A