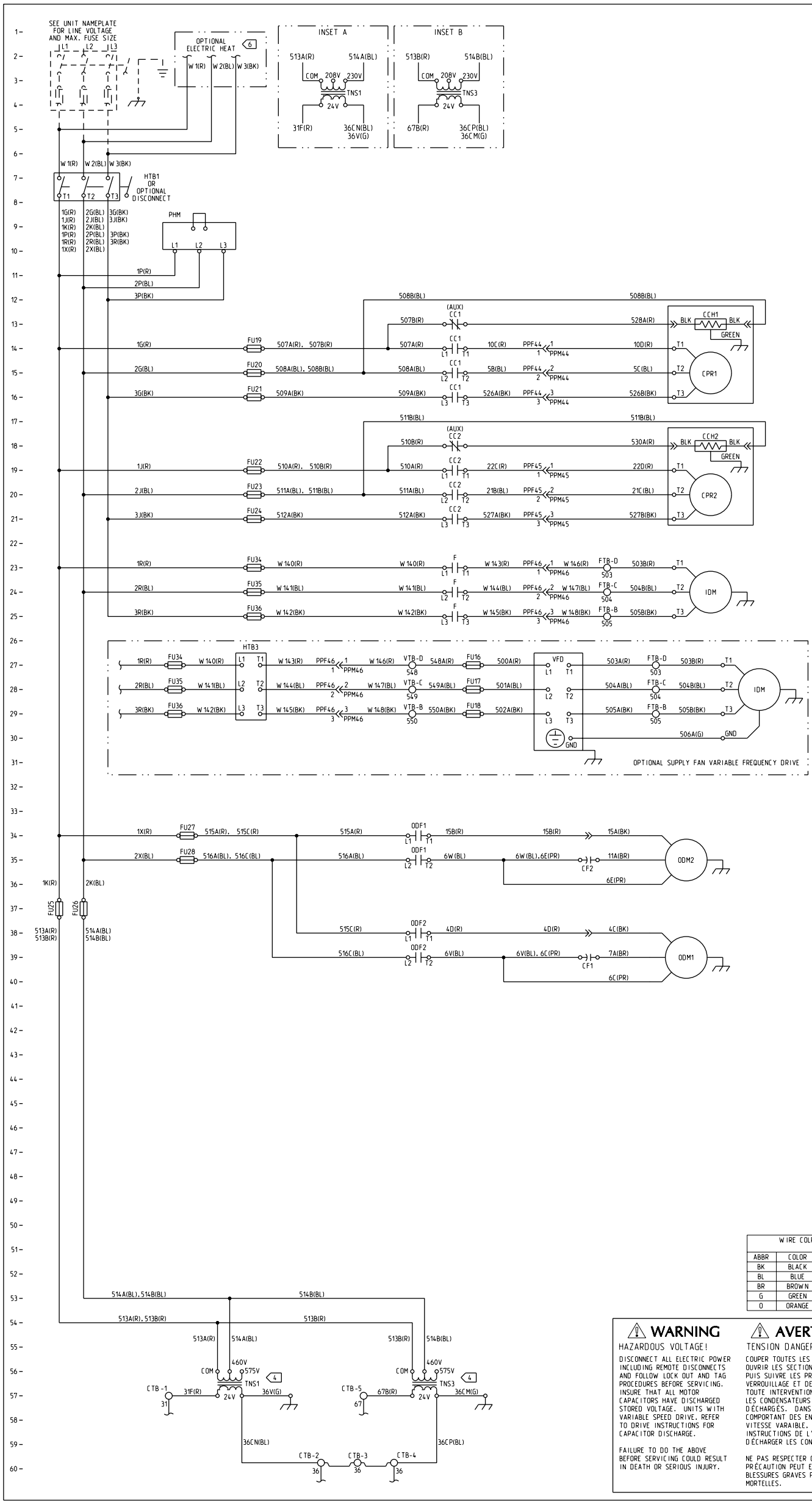

LEGEND		
DEVICE DESIG	DESCRIPTION	LINE NUMBER
CC1	CONTACTOR - COMPRESSOR	13.14.15.16
CC2	CONTACTOR - COMPRESSOR	18.19.20.21
CCH1	HEATER - CRANKCASE	13
CCH2	HEATER - CRANKCASE	18
CF1	CAPACITOR - OD MOTOR	39
CF2	CAPACITOR - OD MOTOR	35
CPR1	COMPRESSOR	14
CPR2	COMPRESSOR	19
F	CONTACTOR - INDOOR FAN	23.24.25
FU16	FUSE - VFD	27
FU17	FUSE - VFD	28
FU18	FUSE - VFD	29
FU19	FUSE - COMPRESSOR #1	14
FU20	FUSE - COMPRESSOR #1	15
FU21	FUSE - COMPRESSOR #1	16
FU22	FUSE - COMPRESSOR #2	19
FU23	FUSE - COMPRESSOR #2	20
FU24	FUSE - COMPRESSOR #2	21
FU25	FUSE - SINGLE PHASE FEEDER	37
FU26	FUSE - SINGLE PHASE FEEDER	37
FU27	FUSE - OUTDOOR FAN MOTORS	34
FU28	FUSE - OUTDOOR FAN MOTORS	35
FU34	FUSE - INDOOR FAN MOTOR	23.27
FU35	FUSE - INDOOR FAN MOTOR	24.28
FU36	FUSE - INDOOR FAN MOTOR	25.29
HTB1	MANUAL DISCONNECT/TERM BLOCK	7
HTB3	TERMINAL BLOCK - SUPPLY FAN VFD	27
IDM	MOTOR - INDOOR	23.27
ODF1	CONTACTOR - OUTDOOR FAN	34.35
ODF2	CONTACTOR - OUTDOOR FAN	38.39
ODM1	MOTOR - OUTDOOR FAN	38
ODM2	MOTOR - OUTDOOR FAN	34
PHM	MODULE - PHASE MONITOR	10
RTOM	OPTIONS MODULE	43
TNS1	TRANSFORMER - CONTROLS POWER	56
TNS3	TRANSFORMER - CONTROLS POWER	56
VFD	VARIABLE FREQUENCY DRIVE - IDM	27

NOTES:

1. UNLESS OTHERWISE NOTED. ALL SWITCHES ARE SHOWN AT 25°C (77°F). AT ATMOSPHERIC PRESSURE. AT 50% RELATIVE HUMIDITY. WITH ALL UTILITIES TURNED OFF. AND AFTER A NORMAL SHUTDOWN HAS OCCURRED.
2. DASHED LINES INDICATE RECOMMENDED FIELD WIRING BY OTHERS. DASHED LINE ENCLOSURES AND/OR DASHED DEVICE OUTLINES INDICATE COMPONENTS PROVIDED BY THE FIELD. PHANTOM LINE ENCLOSURES INDICATE ALTERNATE CIRCUITRY OR AVAILABLE SALES OPTIONS. SOLID LINE INDICATES WIRING BY TRANE CO.
3. NUMBERS ALONG THE RIGHT SIDE MARGIN OF THE SCHEMATIC DESIGNATE. BY LINE NUMBER. THE LOCATION OF CONTACTS ENERGIZED BY COIL. AN UNDERLINED NUMBER INDICATES A NORMALLY CLOSED CONTACT. AN OPEN ARROWHEAD POINTING UPWARD BELOW THE LINE NUMBER INDICATES A TIMED CONTACT WHICH BEGINS TIMING WHEN ENERGIZED.

4 WIRING SHOWN IS FOR 460V UNITS. FOR 575V. MOVE ALL WIRES FROM THE 460V TERMINAL TO THE 575V TERMINAL ON TNS1 AND TNS3. FOR 230V WIRING. SEE INSET A AND B.

6 SEE APPLICABLE HEATING SECTION DIAGRAM FOR BALANCE OF CIRCUIT WHEN OPTIONAL ELECTRIC HEAT IS REQUIRED.

CAUTION

USE COPPER CONDUCTORS ONLY!

UNIT TERMINALS ARE NOT DESIGNED TO ACCEPT OTHER TYPES OF CONDUCTORS.

FAILURE TO DO SO MAY CAUSE DAMAGE TO THE EQUIPMENT.

ATTENTION

N'UTILISER QUE DES CONDUCTEURS EN CUIVRE!

LES BORNES DE L'UNITÉ NE SONT PAS CONÇUES POUR RECEVOIR D'AUTRES TYPES DE CONDUCTEURS.

L'UTILISATION DE TOUT AUTRE CONDUCTEUR PEUT ENDOMMAGER L'ÉQUIPEMENT.

PRECAUCIÓN

¡UTILICE ÚNICAMENTE CONDUCTORES DE COBRE!

LAS TERMINALES DE LA UNIDAD NO ESTÁN DISEÑADAS PARA ACEPTAR OTROS TIPOS DE CONDUCTORES.

SI NO LO HACE. PUEDE OCASIONAR DAÑO AL EQUIPO.

WIRE COLR DESIGNATION			
ABBR	COLOR	ABBR	COLOR
BK	BLACK	V.(PR)	PURPLE
BL	BLUE	R	RED
BR	BROWN	TN	TAN
G	GREEN	W	WHITE
O	ORANGE	Y	YELLOW

⚠ WARNING

HAZARDOUS VOLTAGE!

DISCONNECT ALL ELECTRIC POWER INCLUDING REMOTE DISCONNECTS AND FOLLOW LOCK OUT AND TAG PROCEDURES BEFORE SERVICING. INSURE THAT ALL MOTOR CAPACITORS HAVE DISCHARGED STORED VOLTAGE. UNITS WITH VARIABLE SPEED DRIVE. REFER TO DRIVE INSTRUCTIONS FOR CAPACITOR DISCHARGE.

FAILURE TO DO THE ABOVE BEFORE SERVICING COULD RESULT IN DEATH OR SERIOUS INJURY.

⚠ AVERTISSEMENT

TENSION DANGEREUSE!

COUPER TOUTES LES TENSIONS ET OUVRIR LES SECTIONNEURS À DISTANCE. PUIS SUIVRE LES PROCÉDURES DE VERROUILLAGE ET DES ÉTIQUETTES AVANT TOUTE INTERVENTION. VÉRIFIER QUE TOUS LES CONDENSATEURS DES MOTEURS SONT DÉCHARGÉS. DANS LE CAS D'UNITÉS COMPORTANT DES ENTRAÎNEMENTS À VITESSE VARAIBLE. SE REPORTER AUX INSTRUCTIONS DE L'ENTRAÎNEMENT POUR DÉCHARGER LES CONDENSATEURS.

NE PAS RESPECTER CES MESURES DE PRÉCAUTION PEUT ENTRAÎNER DES BLESSURES GRAVES POUVANT ÊTRE MORTELLES.

⚠ ADVERTENCIA

¡VOLTAJE PELIGROSO!

DESCONECTE TODA LA ENERGÍA ELÉCTRICA. INCLUSO LAS DESCONEXIONES REMOTAS Y SIGA LOS PROCEDIMIENTOS DE CIERRE Y ETIQUETADO ANTES DE PROCEDER AL SERVICIO. ASEGÚRESE DE QUE TODOS LOS CAPACITORES DEL MOTOR HAYAN DESCARGADO EL VOLTAJE ALMACENADO. PARA LAS UNIDADES CON EJE DE DIRECCIÓN DE VELOCIDAD VARIABLE. CONSULTE LAS INSTRUCCIONES PARA LA DESCARGA DEL CONDENSADOR.

EL NO REALIZAR LO ANTERIORMENTE INDICADO. PODRÍA OCASIONAR LA MUERTE O SERIAS LESIONES PERSONALES.

THIS DRAWING IS PROPRIETARY AND SHALL NOT BE COPIED OR REPRODUCED IN WHOLE OR IN PART WITHOUT THE CONSENT OF TRANE.

TRANE

DRAWN BY: B.WALDEN
REPLACES: --
CAD SYSTEM USED: Pro/DIAGRAM
TRANE® DATE: 31-Oct-12
REVISION DATE: 10-APR-13
SIMILAR TO: --

FILE NUMBER: 2313-1577
DRAWING NUMBER: 2313-1578
SHEET: 1 OF 1
REV: C

VOYAGER 2
DIAGRAM
POWER SCHEMATIC
COOLING ONLY / HEAT PUMP
65K SCCR