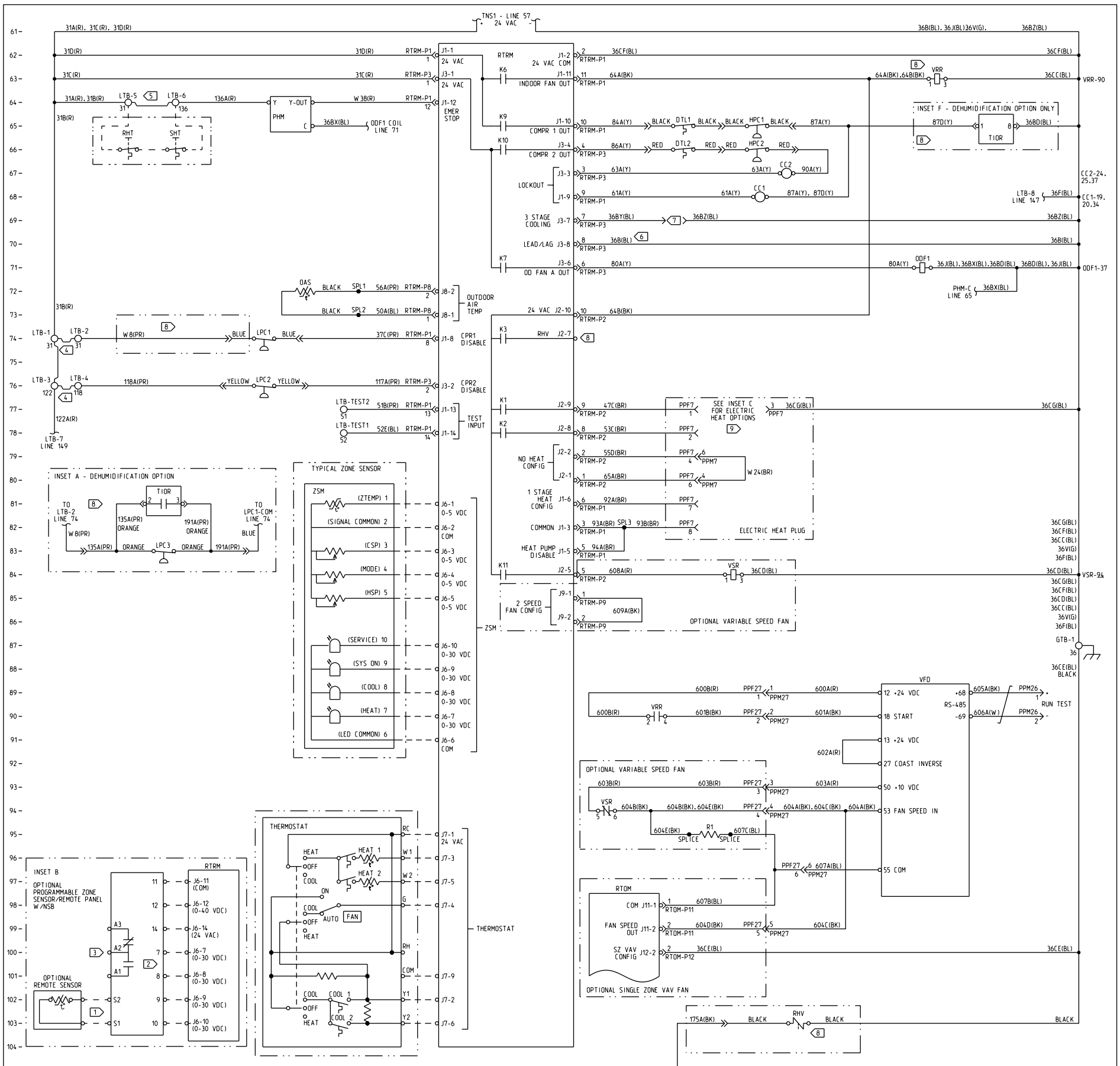

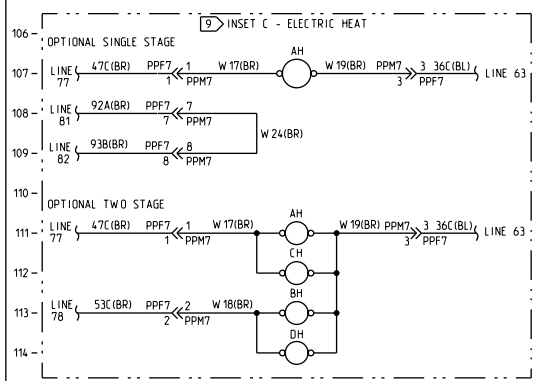

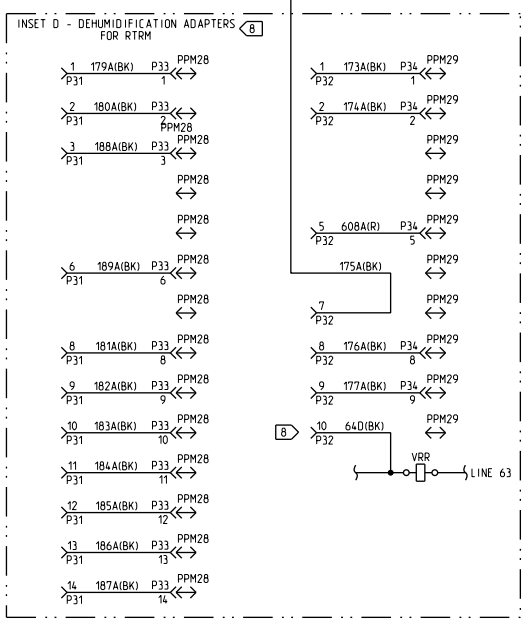

1. INSTALL OPTIONAL REMOTE SENSOR TO TERMINALS S1 AND S2 WHEN REQUIRED. SEE PROGRAMMABLE ZONE SENSOR/REMOTE PANEL WITH NSB LITERATURE FOR OPTIONAL CONFIGURATION.
2. TERMINALS 7, 8, 9, AND 10 ARE FOR OPTIONAL INDICATORS.
3. AUXILIARY RELAY ENERGIZED DURING OCCUPIED PERIODS.
4. TO DISABLE COMPRESSORS, REMOVE JUMPERS BETWEEN LTB-1 AND LTB-2 AND BETWEEN LTB-3 AND LTB-4 AND CONNECT FIELD SUPPLIED CONTROL DEVICE.
5. TO SHUT DOWN THE UNIT FOR EMERGENCY STOP, REMOVE BETWEEN LTB-5 AND LTB-6 JUMPER AND INSTALL FIELD SUPPLIED DEVICE.
6. TO ENABLE COMPRESSOR LEAD/LAG OPERATION CUT WIRE 36B(BL).
7. CONNECT WIRES 36BY(BL) AND 36BZ(BL) TO ENABLE 3 STAGE COOLING.
8. WHEN OPTIONAL DEHUMIDIFICATION IS REQUIRED, CONNECT TIOR AS SHOWN INSET A AND F, AND INSERT DEHUMIDIFICATION ADAPTERS (SHOWN IN INSET D) BETWEEN RTRM AND STANDARD HARNESES.
   A. CONNECT P31 TO RTRM-J1, P32 TO RTRM-J2, RTRM-P1 TO PPM28 AND RTRM-P2 TO PPM29.
   B. CONNECT REHEAT VALVE (RHV) AS SHOWN.
   C. CONNECT 64D(BK) FROM P32-10 TO VRR (COIL.
9. SEE APPLICABLE HEATING SECTION DIAGRAM FOR BALANCE OF CIRCUIT WHEN OPTIONAL ELECTRIC HEAT IS REQUIRED. HEAT CONTACTORS AND ASSOCIATED WIRING USED WITH THE FOLLOWING ELECTRIC HEAT OPTIONS:

CONTACTOR	ELECTRIC HEAT OPTION
AH	ALL
BH	36, 54 AND 72 KW
CH	54 AND 72 KW
DH	72 KW

LEGEND

DEVICE DESIG	DESCRIPTION	LINE NUMBER
CC1	CONTACTOR - COMPRESSOR #1	68
CC2	CONTACTOR - COMPRESSOR #2	67
DTL1	SWITCH - DISCHARGE TEMP LIMIT #1	65
DTL2	SWITCH - DISCHARGE TEMP LIMIT #2	66
HPC1	SWITCH - HIGH PRESSURE #1	65
HPC2	SWITCH - HIGH PRESSURE #2	66
LPC1	SWITCH - LOW PRESSURE #1	74
LPC2	SWITCH - LOW PRESSURE #2	76
LPC3	SWITCH - LOW PRESSURE #3	83
OAS	SENSOR - OUTDOOR AIR TEMP	72
ODF1	RELAY - OUTDOOR FAN #1	71
PHM	PHASE MONITOR	64
R1	RESISTOR -	95
RHT	SWITCH - RETURN HIGH TEMPERATURE	66
RHV	VAVLE - REHEAT	103
RTOM	MODULE - RTOM	98
RTRM	MODULE - RELIATEL REGRIGERATION	62
SHT	SWITCH - SUPPLY HIGH TEMPERATURE	66
TIOR	MODULE - TIMED OVERRIDE	65.81
VFD	VFD - TITLE 24 & SINGLE ZONE VAV	89
VRR	RELAY - VFD RUN	63.90
VSR	RELAY - VFD SPEED	84.94
ZSM	MODULE - ZONE SENSOR	81

TRANE
THIS DRAWING IS PROPRIETARY AND SHALL NOT BE COPIED OR IMITATED IN WHOLE OR IN PART WITHOUT THE CONSENT OF TRANE

DRAWN BY: D. SHANNON
REPLACES: 2313-0066
CAD SYSTEM VERSION: Pro/DIAGRAM
TRANE® DATE: 3-6-12
SIMILAR TO:
REVISION DATE:

CONTROL SCHEMATIC - RELIATEL COOLING ONLY
VARIABLE AIR VOLUME
VOYAGER 2
DIAGRAM

FILE NUMBER: 2313-1486
DRAWING NUMBER: 2313-1491
SHEET: 1 of 1
REV: A