NOTES:

1. ALL WIRING AND DEVICES SHOWN DASHED TO BE SUPPLIED AND INSTALLED BY THE CUSTOMER IN ACCORDANCE WITH LOCAL AND NATIONAL ELECTRICAL CODES.
2. IF ANY OF THE ORIGINAL WIRE, AS SUPPLIED WITH THIS UNIT, MUST BE REPLACED, REPLACE IT WITH APPLIANCE WIRING MATERIAL RATED AT 105°C.
3. THREE PHASE MOTORS ARE PROTECTED UNDER PRIMARY SINGLE PHASING CONDITIONS. ALL MOTORS HAVE INTERNAL OVERLOAD PROTECTION. COMPRESSORS HAVE INTERNAL THERMAL PROTECTION.

11 REQUIRED FOR OPTIONAL REFERENCE ENTHALPY CONTROL.
12 REQUIRED FOR OPTIONAL COMPARATIVE ENTHALPY CONTROL.
13 OPTIONAL MAS, RAS, RHS, OHS AND ASSOCIATED WIRING NOT USED WITH MOTORIZED OUTSIDE AIR.
15 WIRE NUMBERS WITH A "/" IN BETWEEN ARE CV/VAV OPTIONS.

WIRE COLOR DESIGNATION			
ABBR	COLOR	ABBR	COLOR
BK	BLACK	PR	PURPLE
BL	BLUE	RD	RED
BR	BROWN	WH	WHITE
GR	GREEN	YL	YELLOW
OR	ORANGE	TN	TAN

IMPORTANT!
DO NOT ENERGIZE UNIT UNTIL CHECK-OUT AND START-UP PROCEDURE HAS BEEN COMPLETED.

TRANE
THIS DRAWING IS PROPRIETARY AND SHALL NOT BE COPIED OR ITS CONTENTS DISCLOSED TO OUTSIDE PARTIES WITHOUT THE CONSENT OF TRANE.

FILE NUMBER: 2313-1432	DRAWING NUMBER: 2313-1472	SHEET: 1 OF 1	REV B
DRAWN BY: D. SHANNON	TRANE® DATE: 10-19-11	VOYAGER 2 DIAGRAM CONNECTIONS - RACEWAY MODULATING GAS HEAT - 208-230 VAC W/ DEHUMID. W/ TITLE 24/SINGLE ZONE VAV	
REPLACES:	REVISION DATE: 10-31-11		
CAD SYSTEM USED: PRO/DETAIL	SIMILAR TO: 2313-0341-B		

YC 241
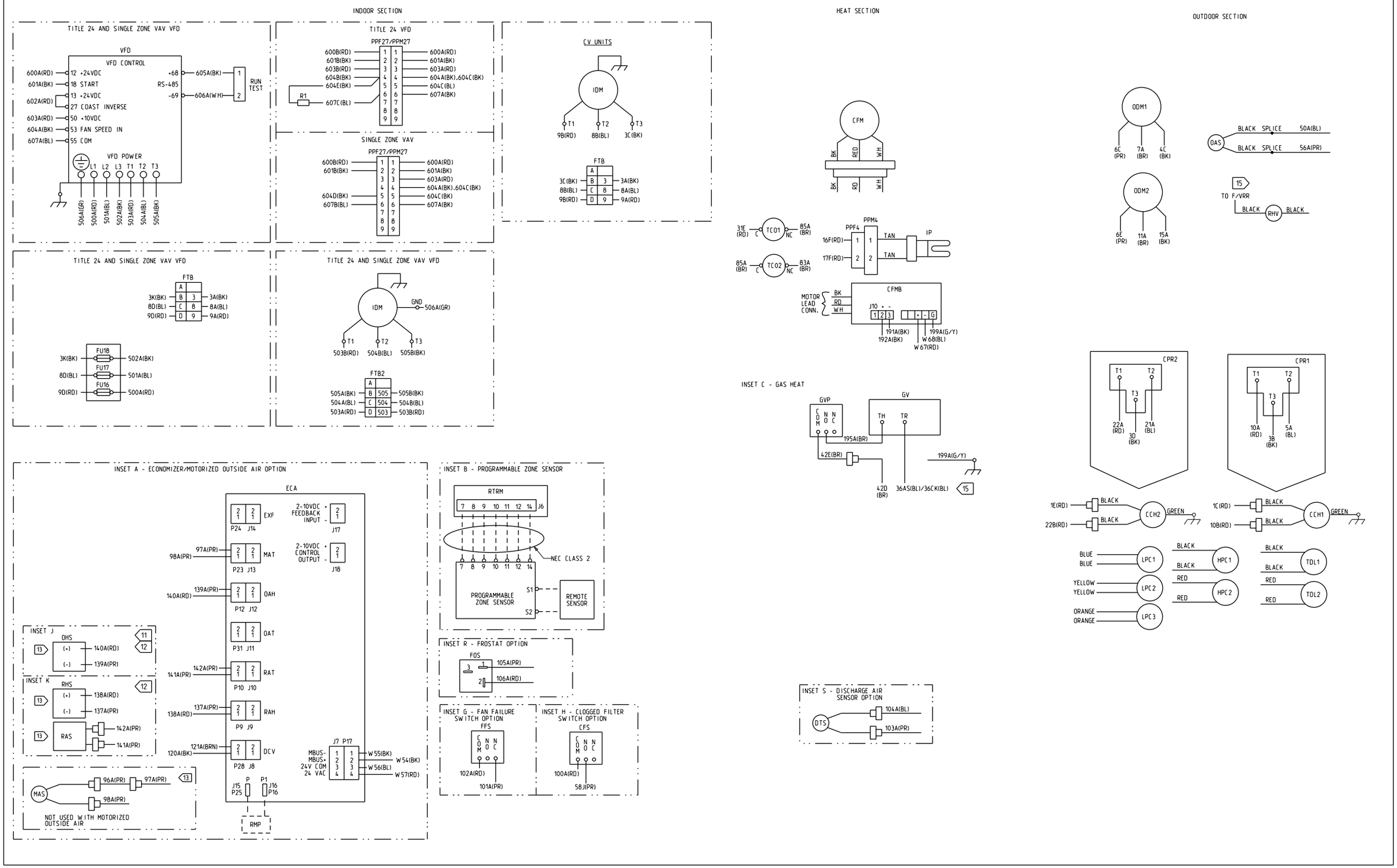
CAUTION	PRECAUCIÓN	ATTENTION
USE COPPER CONDUCTORS ONLY!	N'UTILISER QUE DES CONDUCTEURS EN CUIVRE!	¡UTILICE ÚNICAMENTE CONDUCTORES DE COBRE!
UNIT TERMINALS ARE NOT DESIGNED TO ACCEPT OTHER TYPES OF CONDUCTORS.	LES BORNES DE L'UNITÉ NE SONT PAS CONÇUES POUR RECEVOIR D'AUTRES TYPES DE CONDUCTEURS.	LAS TERMINALES DE LA UNIDAD NO ESTÁN DISEÑADAS PARA ACEPTAR OTROS TIPOS DE CONDUCTORES.
FAILURE TO DO SO MAY CAUSE DAMAGE TO THE EQUIPMENT.	L'UTILISATION DE TOUT AUTRE CONDUCTEUR PEUT ENDOMMAGER L'ÉQUIPEMENT.	SI NO LO HACE, PUEDE OCASIONAR DAÑO AL EQUIPO.