⚠ WARNING

HAZARDOUS VOLTAGE!

DISCONNECT ALL ELECTRIC POWER INCLUDING REMOTE DISCONNECTS AND FOLLOW LOCK OUT AND TAG PROCEDURES BEFORE SERVICING. INSURE THAT ALL MOTOR CAPACITORS HAVE DISCHARGED STORED VOLTAGE. UNITS WITH VARIABLE SPEED DRIVE, REFER TO DRIVE INSTRUCTIONS FOR CAPACITOR DISCHARGE.

FAILURE TO DO THE ABOVE BEFORE SERVICING COULD RESULT IN DEATH OR SERIOUS INJURY.

⚠ AVERTISSEMENT

TENSION DANGEREUSE!

COUPER TOUTES LES TENSIONS ET OUVRIR LES SECTIONNEURS À DISTANCE. PUIS SUIVRE LES PROCÉDURES DE VERROUILLAGE ET DES ÉTIQUETTES AVANT TOUTE INTERVENTION. VÉRIFIER QUE TOUS LES CONDENSATEURS DES MOTEURS SONT DÉCHARGÉS. DANS LE CAS D'UNITÉS COMPORTANT DES ENTRAÎNEMENTS À VITESSE VARAIBLE, SE REPORTER AUX INSTRUCTIONS DE L'ENTRAÎNEMENT POUR DÉCHARGER LES CONDENSATEURS.

NE PAS RESPECTER CES MESURES DE PRÉCAUTION PEUT ENTRAÎNER DES BLESSURES GRAVES POUVANT ÊTRE MORTELLES.

⚠ ADVERTENCIA

¡VOLTAJE PELIGROSO!

DESCONECTE TODA LA ENERGÍA ELÉCTRICA, INCLUSO LAS DESCONEXIONES REMOTAS Y SIGA LOS PROCEDIMIENTOS DE CIERRE Y ETIQUETADO ANTES DE PROCEDER AL SERVICIO. ASEGÚRESE DE QUE TODOS LOS CAPACITORES DEL MOTOR HAYAN DESCARGADO EL VOLTAJE ALMACENADO. PARA LAS UNIDADES CON EJE DE DIRECCIÓN DE VELOCIDAD VARIABLE, CONSULTE LAS INSTRUCCIONES PARA LA DESCARGA DEL CONDENSADOR.

EL NO REALIZAR LO ANTERIORMENTE INDICADO, PODRÍA OCASIONAR LA MUERTE O SERIAS LESIONES PERSONALES.

NOTES:

1. WIRING SHOWN IS FOR 460V. FOR 575V MOVE ALL WIRES FROM 460V TERMINAL TO 575V TERMINAL.
2. FUSES FU5, FU6, FU30, RELAY XFR AND ASSOCIATED WIRES ARE USED WITH OPTIONAL POWERED EXHAUST ONLY.
3. WIRES 400A (RD) AND 401A (BL) ARE CONNECTED TO FACTORY SUPPLIED DISCONNECT SWITCH.
4. WIRE TIE COMMUNICATION WIRES FROM BMS TO TCI/LCI/BCI TO BOTTOM OF CONTROL BOX. SEE TCI/LCI/BCI LITERATURE FOR SWITCH SETTINGS.
5. WIRING SHOWN IS FOR UNITS WITHOUT OPTIONAL DEHUMIDIFICATION. FOR DEHUMIDIFICATION CONNECTIONS, SEE INSET A.
6. WIRE 36BS NOT USED ON 35T UNITS.
8. MANUAL BYPASS SWITCH AND WIRES 413A, 414A, 415A OPTIONAL.
9. WIRES 35E, 51A, 52A, 53A & 68A ARE USED WITH LOW HEAT ONLY. FOR HIGH HEAT OPTION, THEY ARE REPLACED BY WIRES 35D, 51B, 52B, 53B AND 68B.
10. WIRES 36BM, & 250B (G/Y) ARE USED WITH HIGH HEAT OPTION ONLY.
11. FIELD INSTALLED BACNET TERMINATOR JUMPER IS REQUIRED FOR TERMINATION AT EACH END OF THE WIRED BACNET COMMUNICATIONS LINK.
12. WIRES FROM THERMOSTAT OR WCI.
14. WIRES 36BU AND 36BV ARE USED ON TRAQ UNITS ONLY. WIRE 36AU AND 33B ARE USED FOR TRAQ/STATITRAK OR FRESH AIR TRACKING.
15. WIRE 36BE USED FOR REHEAT ONLY.
16. WIRE 36BN IS USED ON MODULATING GAS HEAT UNITS ONLY.

TRANE	FILE NUMBER: 2313-1318	DRAWING NUMBER: 2313-1251	SHEET: 1 OF 1	REV A
THIS DRAWING IS PROPRIETARY AND SHALL NOT BE COPIED OR ITS CONTENTS DISCLOSED TO OUTSIDE PARTIES WITHOUT THE CONSENT OF TRANE.	VOYAGER 3 CONTROL BOX CONNECTION PRINT 27.5-35 TON 380V-575V SINGLE ZONE VARIABLE AIR VOLUME 2 STAGE GAS HEAT			
DRAWN BY: R. JOHNSON	TRANE® DATE: 7/30/12			
REPLACES: 2313-0757	REVISION DATE: --			
CAD SYSTEM USED: PRO/DETAIL	SIMILAR TO:			

CAUTION

USE COPPER CONDUCTORS ONLY!

UNIT TERMINALS ARE NOT DESIGNED TO ACCEPT OTHER TYPES OF CONDUCTORS.

FAILURE TO DO SO MAY CAUSE DAMAGE TO THE EQUIPMENT.

PRECAUCIÓN

N'UTILISER QUE DES CONDUCTEURS EN CUIVRE!

LES BORNES DE L'UNITÉ NE SONT PAS CONÇUES POUR RECEVOIR D'AUTRES TYPES DE CONDUCTEURS.

L'UTILISATION DE TOUT AUTRE CONDUCTEUR PEUT ENDOMMAGER L'ÉQUIPEMENT.

ATTENTION

¡UTILICE ÚNICAMENTE CONDUCTORES DE COBRE!

LAS TERMINALES DE LA UNIDAD NO ESTÁN DISEÑADAS PARA ACEPTAR OTROS TIPOS DE CONDUCTORES.
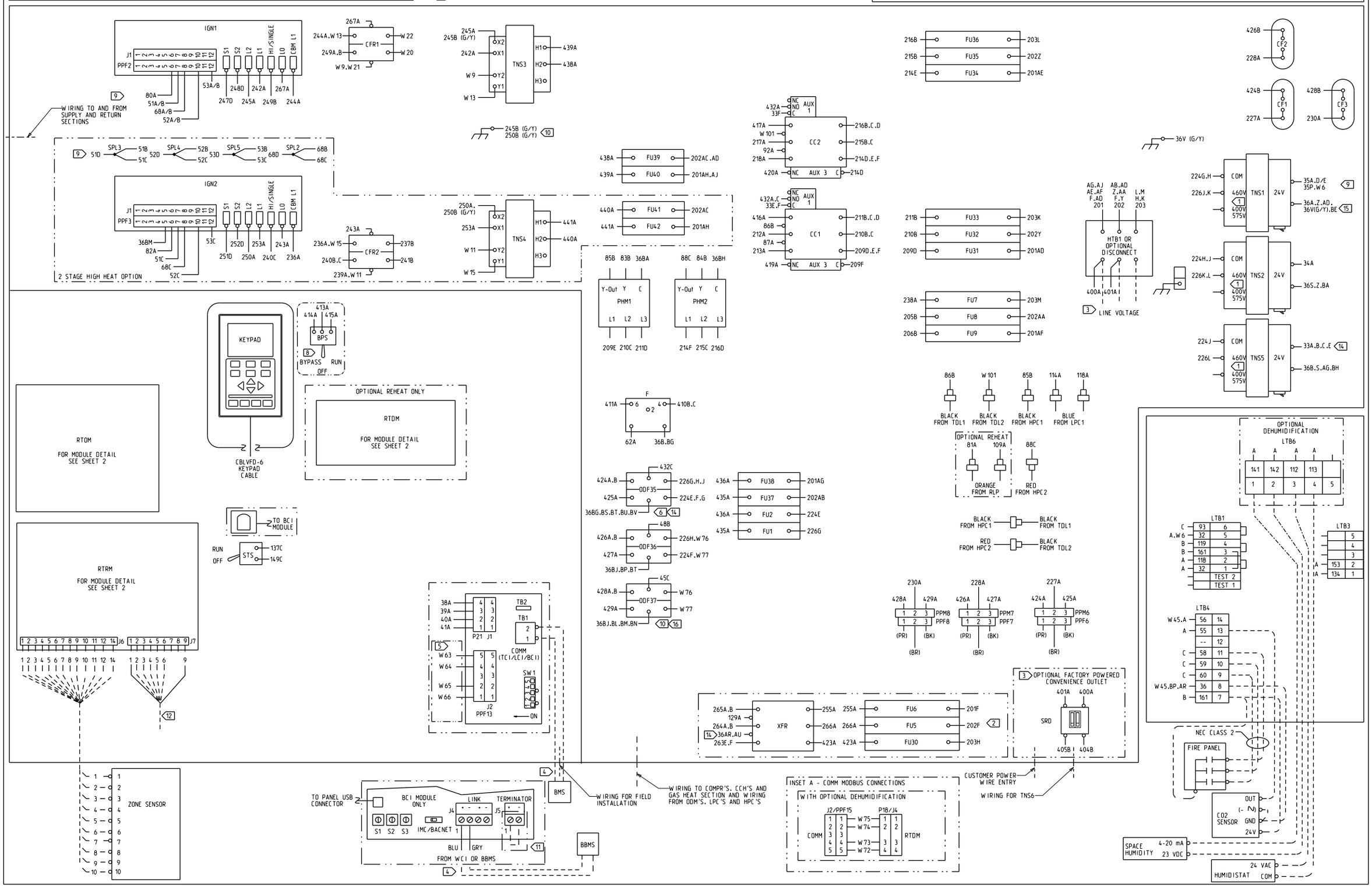
SI NO LO HACE, PUEDE OCASIONAR DAÑO AL EQUIPO.