NOTES:

1. OPTIONAL DISCHARGE AIR TEMPERATURE SENSOR REQUIRED FOR SUPPLY AIR TEMPERING AND DEHUMIDIFICATION.
2. OPTIONAL CLOGGED FILTER SWITCH.
3. REQUIRED FOR OPTIONAL VENTILATION OVERRIDE.
4. REQUIRED FOR OPTIONAL REFERENCE ENTHALPY CONTROL.
5. REQUIRED FOR OPTIONAL COMPARATIVE ENTHALPY CONTROL.
6. WIRING SHOWN IS FOR UNITS WITHOUT OPTIONAL COMMUNICATIONS BOARD (LCI/TCI/BCI) OR DEHUMIDIFICATION. FOR OPTIONAL CONNECTIONS. SEE INSET A.
7. WIRING SHOWN IS FOR UNITS WITH OPTIONAL ECONOMIZER WITHOUT STATITRAC OPTION. FOR OPTIONAL CONNECTIONS. SEE INSET B.
8. REQUIRED FOR OPTIONAL 50% POWERED EXHAUST.
9. XFM2 REQUIRED FOR OPTIONAL 100% POWERED EXHAUST.
10. REQUIRED FOR OPTIONAL FRESH AIR TRACKING EXHAUST. NOTE: ON STATITRAC UNITS. CONNECTIONS ARE MADE WITH WIRES 182B AND 183B (NOT 182A AND 183A).
11. CUSTOMER TO PROVIDE WIRES 408A (WHT), 409A (BLK) AND GROUND WIRE (G/Y) WHEN FIELD POWERED.
12. WIRE 36AE IS NOT USED FOR 35 TON UNITS.

15. WIRES 51A, 52A, & 53A ARE USED ON LOW HEAT UNITS ONLY. ON HIGH HEAT UNITS, WIRES 51D, 52D, & 53D WILL BE PRESENT.
16. UNITS WITH LOW HEAT HAVE SINGLE HEAT EXCHANGER. HIGH HEAT UNITS HAVE TWO HEAT EXCHANGERS.

22. SENSOR EET AND WIRES 110A & 111A USED WITH OPTIONAL DEHUMIDIFICATION AND IS ATTACHED TO CIRCUIT 1 FOR 27.5-35 TON UNITS, AND TO CIRCUIT 2 FOR 40-50 TON UNITS.
23. WIRE 117A IS REQUIRED TO ENABLE DEHUMIDIFICATION. WIRES 141A AND 142A ARE USED WITH DEHUMIDIFICATION AND CUSTOMER INSTALLED SPACE HUMIDITY SENSOR (SHS). WIRES 112A AND 113A ARE USED WITH DEHUMIDIFICATION AND CUSTOMER INSTALLED HUMIDISTAT (HST).

	FUSE REPLACEMENT TABLE		
FU1 FU2	208-230V	CLASS CC	20 AMP
	380-415V	CLASS CC	15 AMP
	460-575V	CLASS CC	15 AMP
FU3 FU4	208-230V	CLASS CC	15 AMP
	380-415V	N/A	N/A
	460-575V	N/A	N/A
FU5 FU6	208-230V	CLASS CC	15 AMP
	380-415V	CLASS CC	5 AMP
	460-575V	CLASS CC	5 AMP
FU20 FU21	208-230V	CLASS CC	10 AMP
	460-575V	CLASS CC	5 AMP

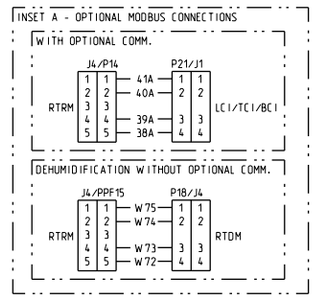

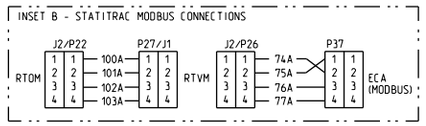

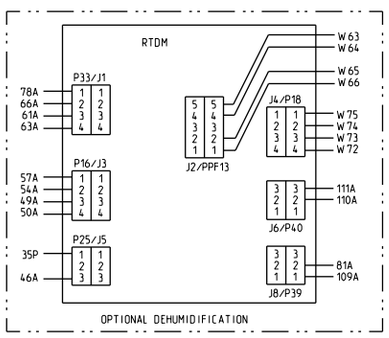

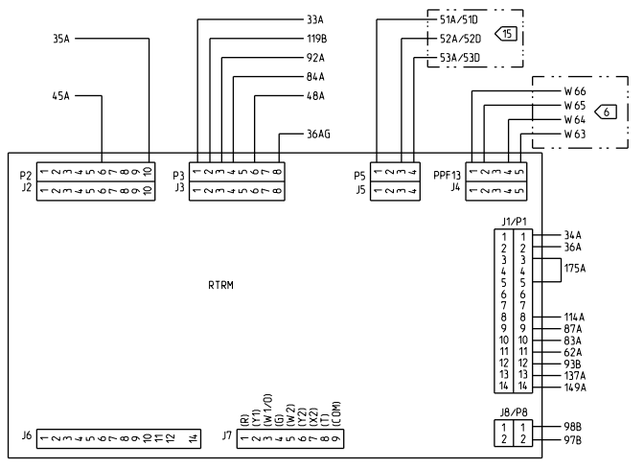

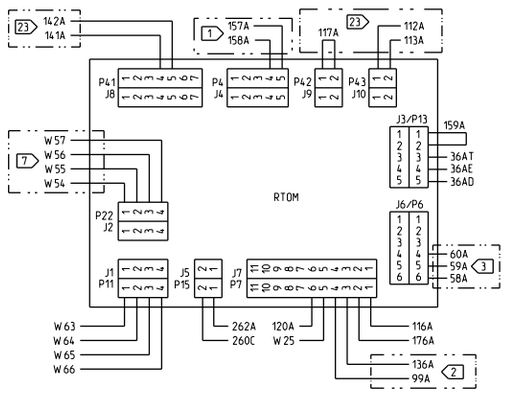

CONDENSER SECTION WIRING

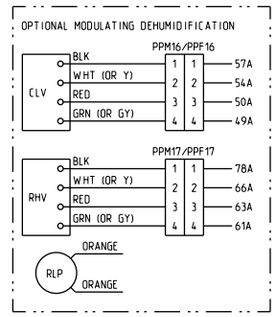

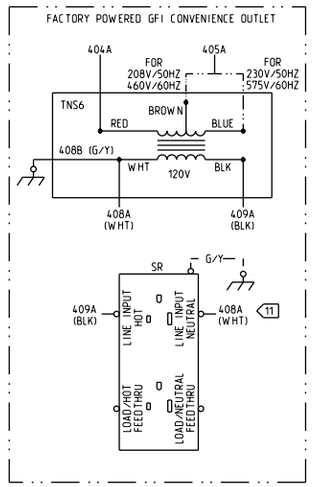

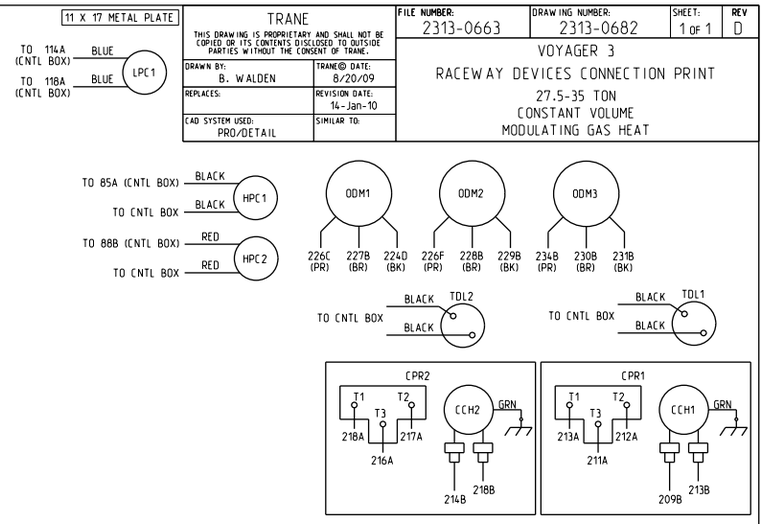

TRANE	FILE NUMBER: 2313-0663	DRAWING NUMBER: 2313-0682	SHEET: 1 OF 1	REV D
THIS DRAWING IS PROPRIETARY AND SHALL NOT BE COPIED OR ITS CONTENTS DISCLOSED TO OUTSIDE PARTIES WITHOUT THE CONSENT OF TRANE.	DRAWN BY: B. WALDEN	TRANE® DATE: 8/20/09	VOYAGER 3 RACEWAY DEVICES CONNECTION PRINT 27.5-35 TON CONSTANT VOLUME MODULATING GAS HEAT	
	REPLACES:	REVISION DATE: 14-Jan-10		
	CAD SYSTEM USED: PRO/DETAIL	SIMILAR TO:		

HEAT SECTION WIRING

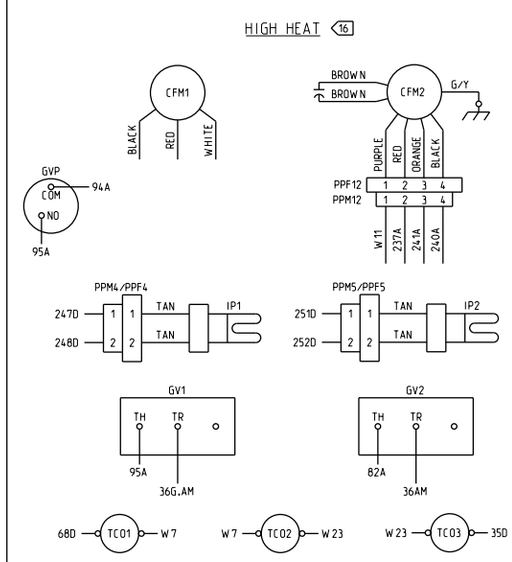

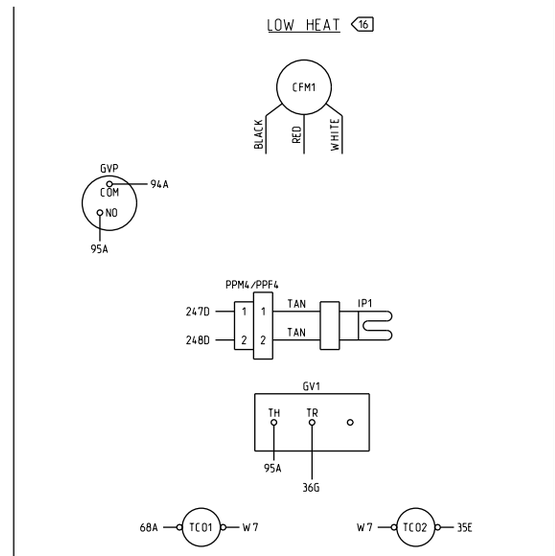

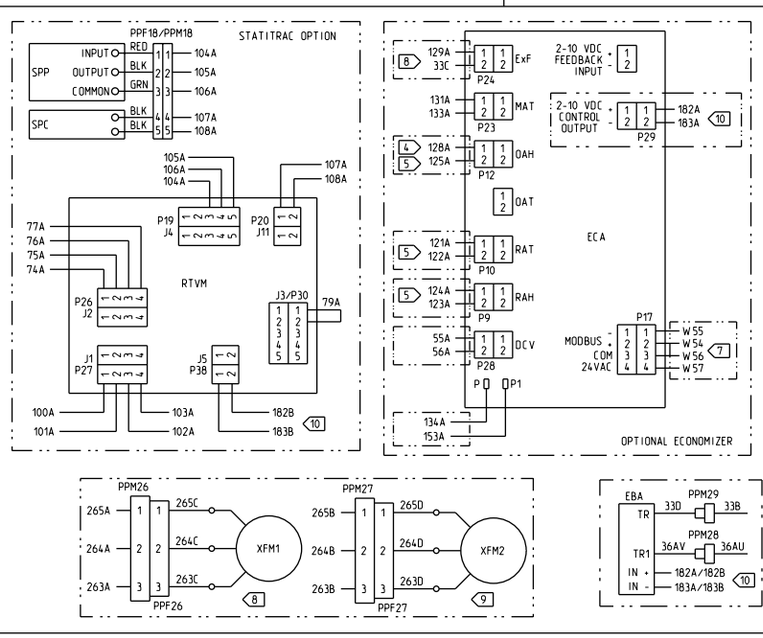

RETURN AIR SECTION WIRING

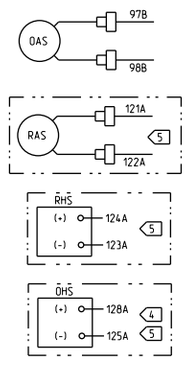
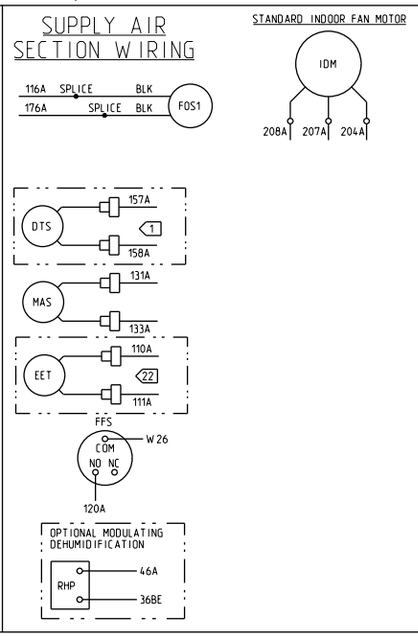
SUPPLY AIR SECTION WIRING