NOTES:

2. OPTIONAL CLOGGED FILTER SWITCH.
3. REQUIRED FOR OPTIONAL VENTILATION OVERRIDE.
4. REQUIRED FOR OPTIONAL REFERENCE ENTHALPY CONTROL.
5. REQUIRED FOR OPTIONAL COMPARATIVE ENTHALPY CONTROL.
6. WIRING SHOWN IS FOR UNITS WITHOUT OPTIONAL COMMUNICATIONS BOARD (LCI/TCI/BCI) OR DEHUMIDIFICATION. FOR OPTIONAL CONNECTIONS. SEE INSET A.
7. WIRING SHOWN IS FOR UNITS WITH OPTIONAL ECONOMIZER WITHOUT STATITRAC OPTION. FOR OPTIONAL CONNECTIONS. SEE INSET B.
8. REQUIRED FOR OPTIONAL 50% POWERED EXHAUST.
9. XFM2 REQUIRED FOR OPTIONAL 100% POWERED EXHAUST.
10. REQUIRED FOR OPTIONAL FRESH AIR TRACKING EXHAUST. NOTE: ON STATITRAC UNITS. CONNECTIONS ARE MADE WITH WIRES 182B AND 183B (NOT 182A AND 183A).
11. CUSTOMER TO PROVIDE WIRES 408A (WHT), 409A (BLK) AND GROUND WIRE (G/Y) WHEN FIELD POWERED.
12. WIRE 36AE IS NOT USED FOR 35 TON UNITS.
13. WIRE 174A REQUIRED FOR TC (COOLING/NO HEAT) UNITS ONLY.
14. WIRES 64D, 65E, & 67B ARE USED ON TE (ELECTRIC HEAT) UNITS ONLY. WIRE 35A IS USED ON TC (COOLING) ONLY.
17. IGVA NOT USED ON UNITS WITH VARIABLE FREQUENCY DRIVES.
18. SEE APPLICABLE VARIABLE FREQUENCY DRIVE DIAGRAM FOR BALANCE OF CIRCUIT.
19. PLUGS LOCATED IN MAIN CONTROL PANEL.
20. WIRES REQUIRED FOR V.F.D. WITH BYPASS OPTION ONLY.
21. WIRES 154A & 155A ARE USED FOR IGV OPTION AND CONNECT TO P34. WIRES 154B & 155B ARE USED FOR VFD OPTION AND CONNECT TO P35.
22. SENSOR EET AND WIRES 110A & 111A USED WITH OPTIONAL DEHUMIDIFICATION AND IS ATTACHED TO CIRCUIT 1 FOR 27.5-35 TON UNITS. AND TO CIRCUIT 2 FOR 40-50 TON UNITS.
23. WIRE 117A IS REQUIRED TO ENABLE DEHUMIDIFICATION. WIRES 141A AND 142A ARE USED WITH DEHUMIDIFICATION AND CUSTOMER INSTALLED SPACE HUMIDITY SENSOR (SHS). WIRES 112A AND 113A ARE USED WITH DEHUMIDIFICATION AND CUSTOMER INSTALLED HUMIDISTAT (HST).

	FUSE REPLACEMENT TABLE		
FU1 FU2	380-415V 460-575V	CLASS CC	15 AMP
FU3 FU4	380-415V 460-575V	N/A	N/A
FU5 FU6 FU30	380-415V 460-575V	CLASS CC	5 AMP
FU20 FU21	460-575V	CLASS CC	5 AMP
FU11 - FU19	380-575V	TYPE RK5	60 AMP

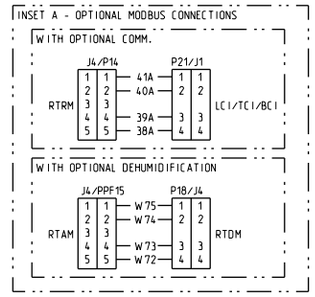

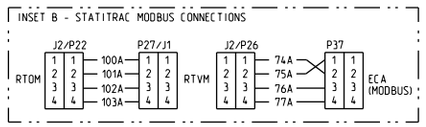

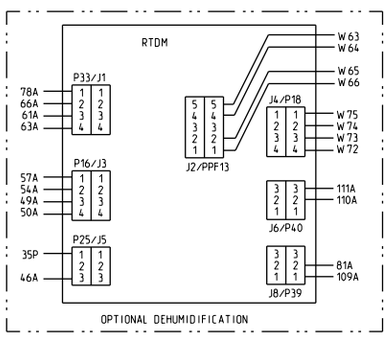

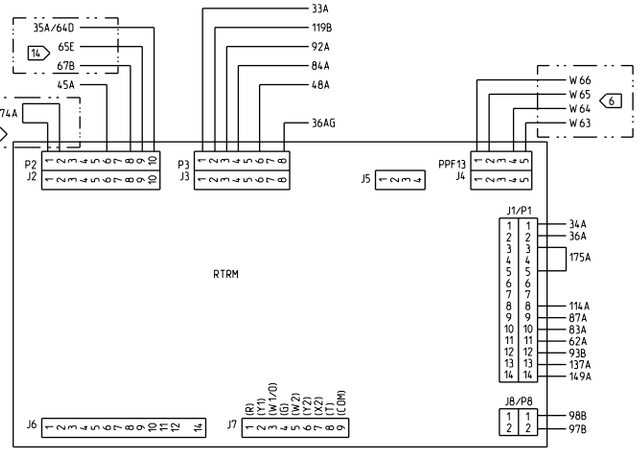

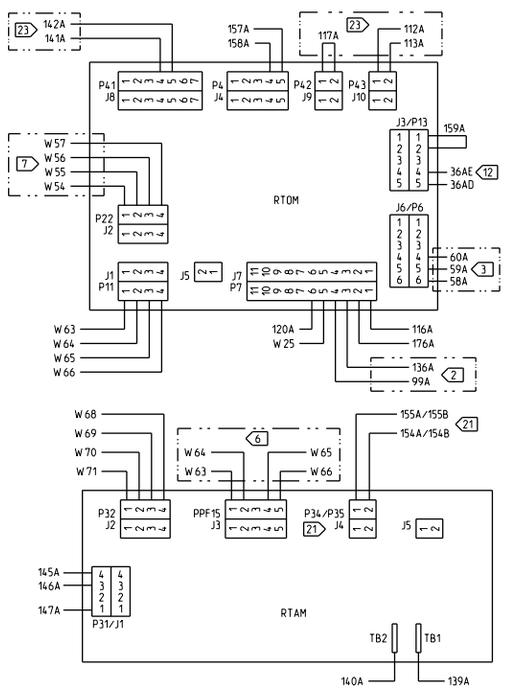

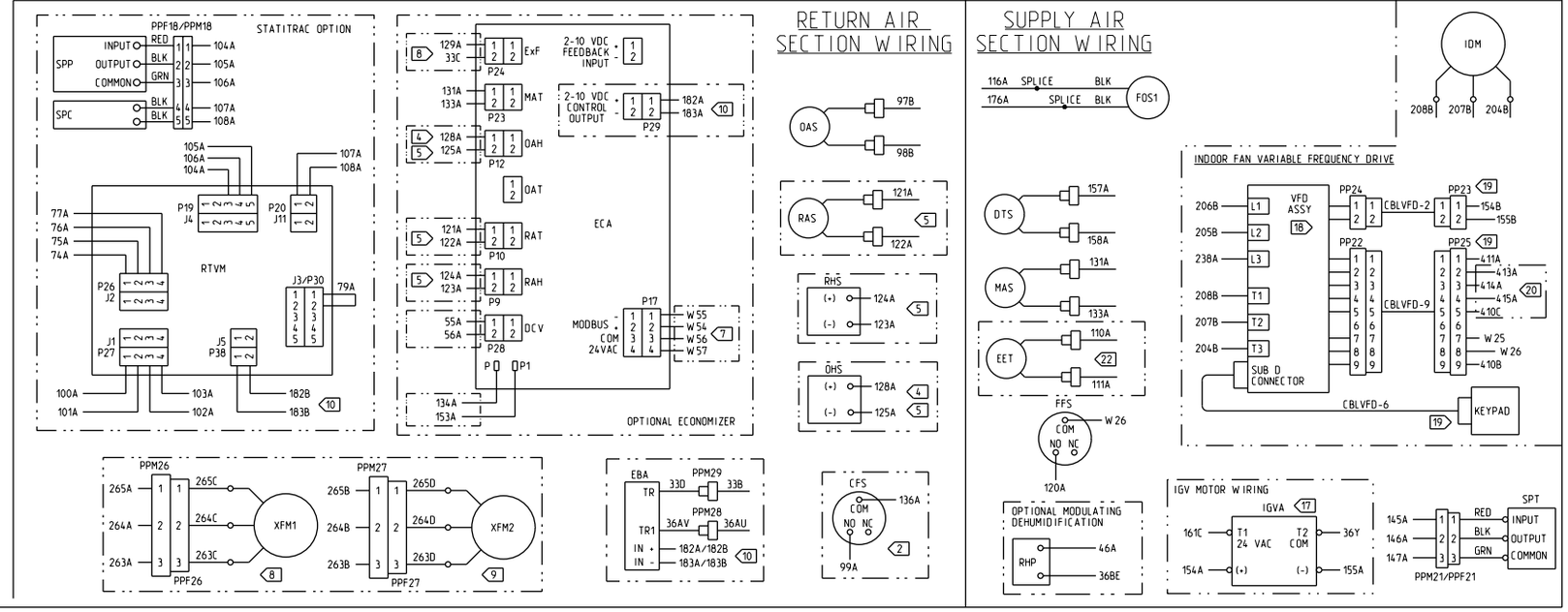

CONDENSER SECTION WIRING

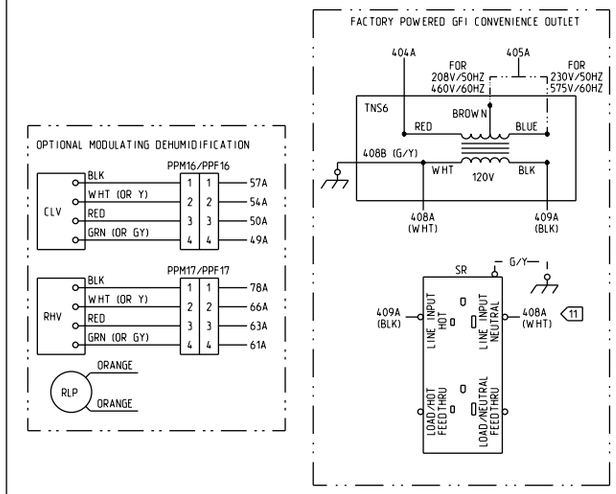

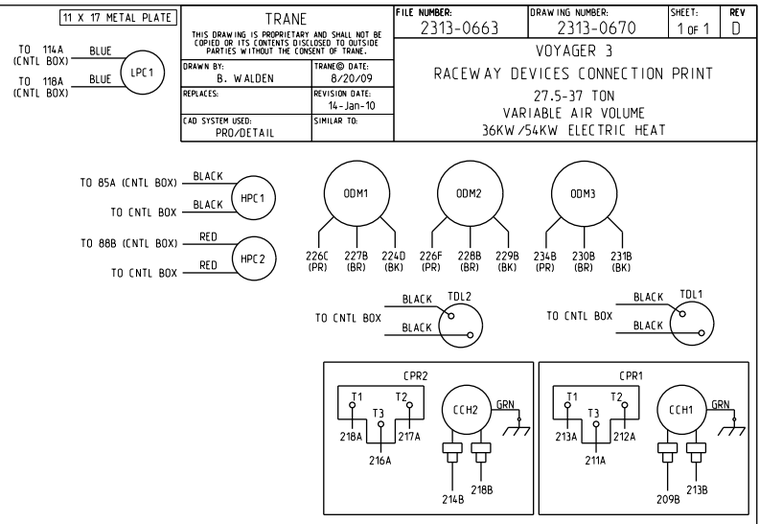

TRANE	FILE NUMBER: 2313-0663	DRAWING NUMBER: 2313-0670	SHEET: 1 OF 1	REV D
THIS DRAWING IS PROPRIETARY AND SHALL NOT BE COPIED OR ITS CONTENTS DISCLOSED TO OUTSIDE PARTIES WITHOUT THE CONSENT OF TRANE.	VOYAGER 3 RACEWAY DEVICES CONNECTION PRINT 27.5-37 TON VARIABLE AIR VOLUME 36KW/54KW ELECTRIC HEAT			
DRAWN BY: B. WALDEN	TRANE® DATE: 8/20/09			
REPLACES:	REVISION DATE: 14-Jan-10			
CAD SYSTEM USED: PRO/DETAIL	SIMILAR TO:			

HEAT SECTION WIRING

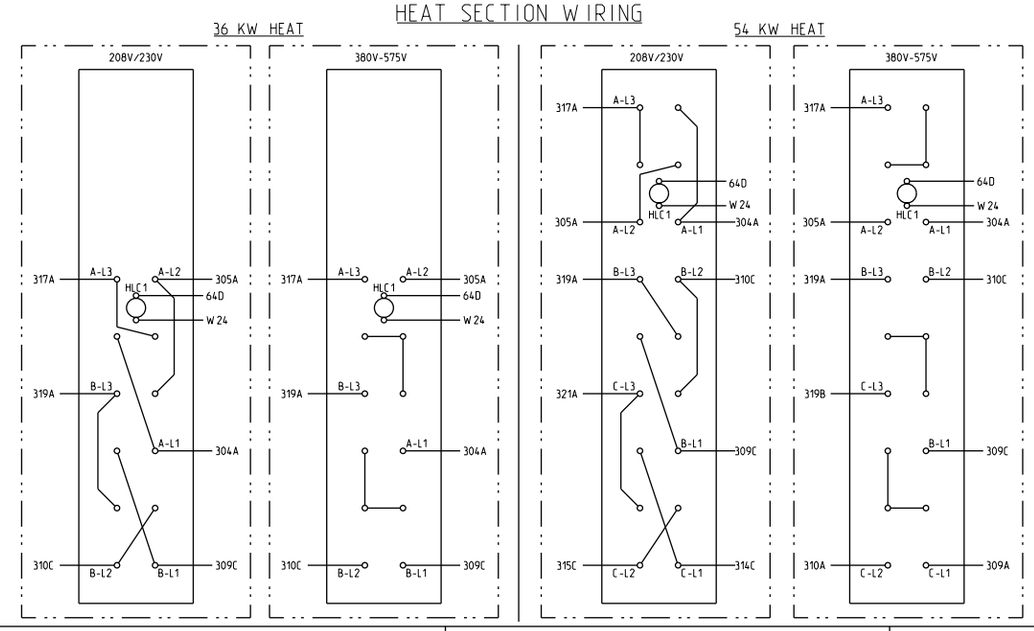

RETURN AIR SECTION WIRING

SUPPLY AIR SECTION WIRING