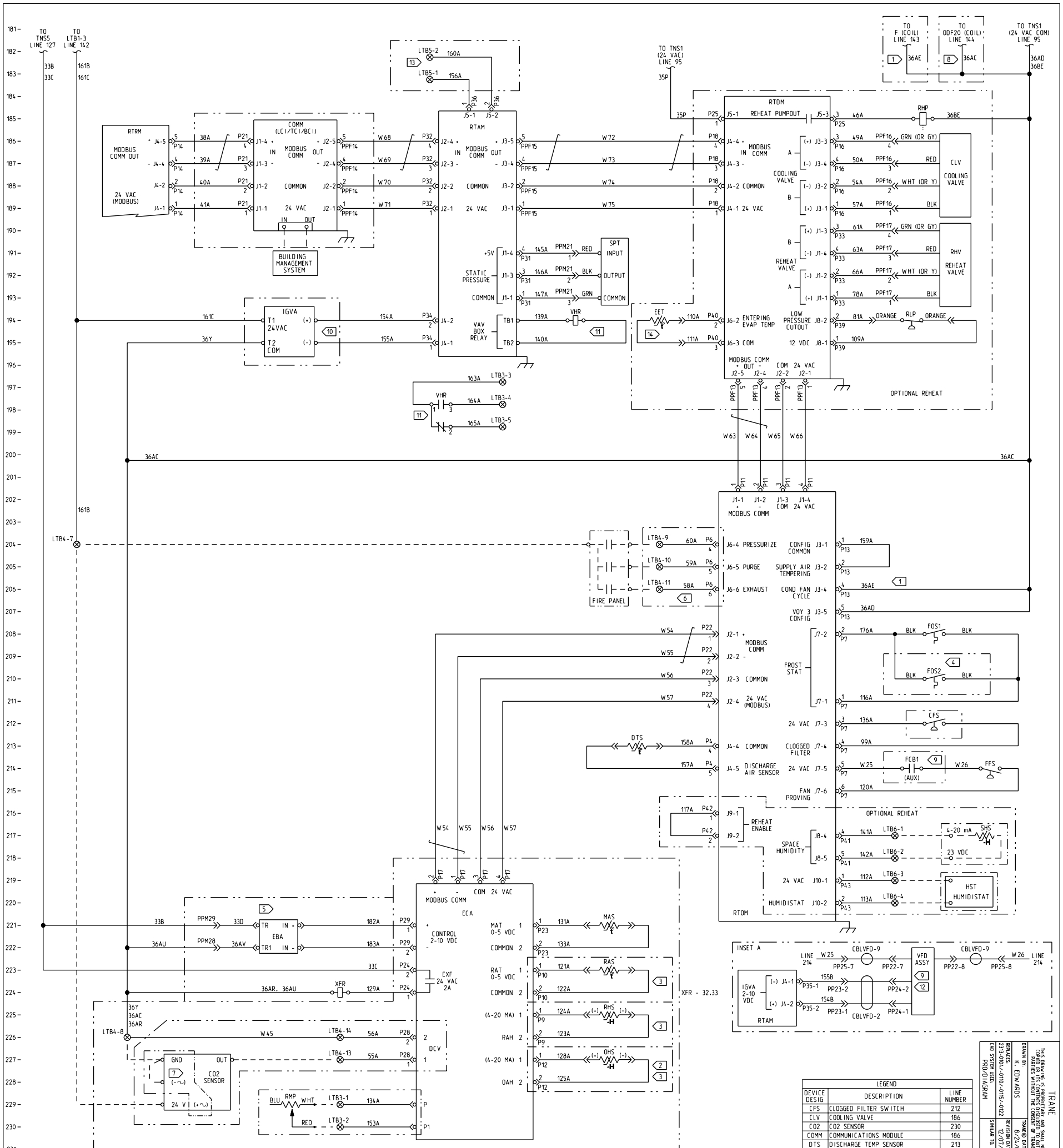

1. WIRE 36AE IS NOT USED FOR 35T AND 50T UNITS.
2. REQUIRED FOR OPTIONAL REFERENCE ENTHALPY CONTROL.
3. REQUIRED FOR OPTIONAL COMPARATIVE ENTHALPY CONTROL.
4. FOS2 USED ON 40T AND 50T UNITS ONLY.
5. EBA REQUIRED FOR OPTIONAL FRESH AIR TRACKING EXHAUST.
6. OPTIONAL VENTILATION OVERRIDE.
7. 0-10 VDC DUCT MOUNTED SENSOR ONLY.
8. WIRE 36AC USED ON UNITS WITH OPTIONAL ECONOMIZER ONLY.
9. WIRING SHOWN IS FOR UNIT WITH INDOOR FAN MOTOR. WHEN UNIT HAS OPTIONAL VARIABLE FREQUENCY DRIVE SEE INSET A.
10. NOT USED ON UNITS WITH VARIABLE FREQUENCY DRIVES (SEE INSET A).
11. RELAY ENERGIZED DURING ALL CV MODES: UNOCC, DWU, MWU.
12. SEE APPLICABLE VARIABLE FREQUENCY DRIVE DIAGRAM FOR BALANCE OF CIRCUIT.
13. SWITCHOVER CONNECTIONS FOR OPTIONAL MODULATING GAS HEAT.
14. SENSOR EET IS ATTACHED TO CIRCUIT 1 FOR 27.5-35 TON UNITS, AND TO CIRCUIT 2 FOR 40-50 TON UNITS.

LEGEND		
DEVICE DESIG	DESCRIPTION	LINE NUMBER
CFS	CLOGGED FILTER SWITCH	212
CLV	COOLING VALVE	186
CO2	CO2 SENSOR	230
COMM	COMMUNICATIONS MODULE	186
DTS	DISCHARGE TEMP SENSOR	213
EBA	EXHAUST BLADE ACTUATOR	212.221
ECA	ECONOMIZER ACTUATOR	222
EET	ENTERING EVAP TEMP SENSOR	194
FCB1	FAN CIRCUIT BREAKER #1	214
FFS	FAN FAILURE SWITCH	214
FOS1	FROST STAT 1	208
FOS2	FROST STAT 2	210
HST	HUMIDISTAT	219
IGVA	INLET GUIDE VANE ACTUATOR	194
MAS	SENSOR - MIXED AIR TEMP	221
OHS	SENSOR - R/A HUMIDITY	227
RAS	SENSOR - RETURN AIR TEMP	223
RHP	SOLENOID - REHEAT PUMPOUT	185
RHS	SENSOR - R/A HUMIDITY	225
RHV	REHEAT VALVE	190
RLP	REHEAT LOW PRESSURE CUTOUT	194
RMP	POTENTIOMETER - REMOTE MIN POS	229
RTAM	VAV MODULE	186
RTDM	DEHUMIDIFICATION MODULE	186
RTOM	OPTIONS MODULE	204
RTRM	REFRIGERATION MODULE	186
SHS	SENSOR - SPACE HUMIDITY	217

CAUTION	PRECAUCIÓN	ATTENTION
USE COPPER CONDUCTORS ONLY!	N'UTILISER QUE DES CONDUCTEURS EN CUIVRE!	¡UTILICE ÚNICAMENTE CONDUCTORES DE COBRE!
UNIT TERMINALS ARE NOT DESIGNED TO ACCEPT OTHER TYPES OF CONDUCTORS.	LES BORNES DE L'UNITÉ NE SONT PAS CONÇUES POUR RECEVOIR D'AUTRES TYPES DE CONDUCTEURS.	LAS TERMINALES DE LA UNIDAD NO ESTÁN DISEÑADAS PARA ACEPTAR OTROS TIPOS DE CONDUCTORES.
FAILURE TO DO SO MAY CAUSE DAMAGE TO THE EQUIPMENT.	L'UTILISATION DE TOUT AUTRE CONDUCTEUR PEUT ENDOMMAGER L'ÉQUIPEMENT.	SI NO LO HACE, PUEDE OCASIONAR DAÑO AL EQUIPO.

THIS DRAWING IS PROPRIETARY AND SHALL NOT BE COPIED OR ITS CONTENTS DISCLOSED TO OUTSIDE PARTIES WITHOUT THE CONSENT OF TRANE.

CAD SYSTEM USED: PRO/DIAGRAM
REPLACES: 2313-0106/-0110/-0115/-0122
DRAWN BY: K. EDWARDS
TRANE® DATE: 8/24/09
SIMILAR TO:
REVISION DATE: 12/07/09

TRANE

CONTROL MODULES SCHEMATIC
VARIABLE AIR VOLUME

VOYAGER 3
DIAGRAM

FILE NUMBER: 2313-0615
DRAWING NUMBER: 2313-0617
SHEET: 1 OF 1
REV: C