CAUTION	PRECAUCIÓN	ATTENTION
USE COPPER CONDUCTORS ONLY!	N'UTILISER QUE DES CONDUCTEURS EN CUIVRE!	¡UTILICE ÚNICAMENTE CONDUCTORES DE COBRE!
UNIT TERMINALS ARE NOT DESIGNED TO ACCEPT OTHER TYPES OF CONDUCTORS.	LES BORNES DE L'UNITÉ NE SONT PAS CONÇUES POUR RECEVOIR D'AUTRES TYPES DE CONDUCTEURS.	LAS TERMINALES DE LA UNIDAD NO ESTÁN DISEÑADAS PARA ACEPTAR OTROS TIPOS DE CONDUCTORES.
FAILURE TO DO SO MAY CAUSE DAMAGE TO THE EQUIPMENT.	L'UTILISATION DE TOUT AUTRE CONDUCTEUR PEUT ENDOMMAGER L'ÉQUIPEMENT.	SI NO LO HACE, PUEDE OCASIONAR DAÑO AL EQUIPO.

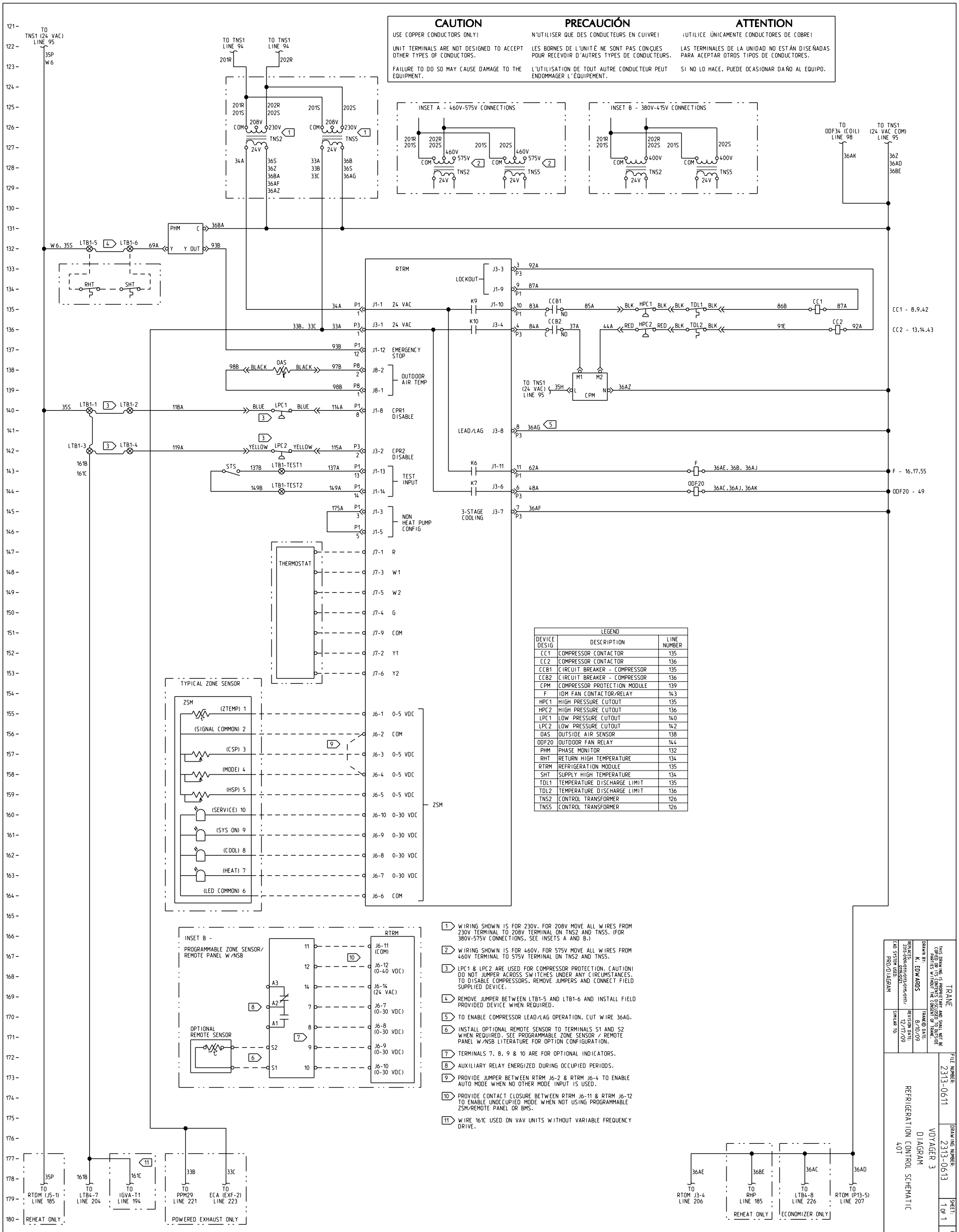

LEGEND		
DEVICE DESIG	DESCRIPTION	LINE NUMBER
CC1	COMPRESSOR CONTACTOR	135
CC2	COMPRESSOR CONTACTOR	136
CCB1	CIRCUIT BREAKER - COMPRESSOR	135
CCB2	CIRCUIT BREAKER - COMPRESSOR	136
CPM	COMPRESSOR PROTECTION MODULE	139
F	IDM FAN CONTACTOR/RELAY	143
HPC1	HIGH PRESSURE CUTOUT	135
HPC2	HIGH PRESSURE CUTOUT	136
LPC1	LOW PRESSURE CUTOUT	140
LPC2	LOW PRESSURE CUTOUT	142
OAS	OUTSIDE AIR SENSOR	138
ODF20	OUTDOOR FAN RELAY	144
PHM	PHASE MONITOR	132
RHT	RETURN HIGH TEMPERATURE	134
RTRM	REFRIGERATION MODULE	135
SHT	SUPPLY HIGH TEMPERATURE	134
TDL1	TEMPERATURE DISCHARGE LIMIT	135
TDL2	TEMPERATURE DISCHARGE LIMIT	136
TNS2	CONTROL TRANSFORMER	126
TNS5	CONTROL TRANSFORMER	126

1. WIRING SHOWN IS FOR 230V. FOR 208V MOVE ALL WIRES FROM 230V TERMINAL TO 208V TERMINAL ON TNS2 AND TNS5. (FOR 380V-575V CONNECTIONS, SEE INSETS A AND B.)
2. WIRING SHOWN IS FOR 460V. FOR 575V MOVE ALL WIRES FROM 460V TERMINAL TO 575V TERMINAL ON TNS2 AND TNS5.
3. LPC1 & LPC2 ARE USED FOR COMPRESSOR PROTECTION. CAUTION! DO NOT JUMPER ACROSS SWITCHES UNDER ANY CIRCUMSTANCES. TO DISABLE COMPRESSORS, REMOVE JUMPERS AND CONNECT FIELD SUPPLIED DEVICE.
4. REMOVE JUMPER BETWEEN LTB1-5 AND LTB1-6 AND INSTALL FIELD PROVIDED DEVICE WHEN REQUIRED.
5. TO ENABLE COMPRESSOR LEAD/LAG OPERATION, CUT WIRE 36AG.
6. INSTALL OPTIONAL REMOTE SENSOR TO TERMINALS S1 AND S2 WHEN REQUIRED. SEE PROGRAMMABLE ZONE SENSOR / REMOTE PANEL W/NSB LITERATURE FOR OPTION CONFIGURATION.
7. TERMINALS 7, 8, 9 & 10 ARE FOR OPTIONAL INDICATORS.
8. AUXILIARY RELAY ENERGIZED DURING OCCUPIED PERIODS.
9. PROVIDE JUMPER BETWEEN RTRM J6-2 & RTRM J6-4 TO ENABLE AUTO MODE WHEN NO OTHER MODE INPUT IS USED.
10. PROVIDE CONTACT CLOSURE BETWEEN RTRM J6-11 & RTRM J6-12 TO ENABLE UNOCCUPIED MODE WHEN NOT USING PROGRAMMABLE ZSM/REMOTE PANEL OR BMS.
11. WIRE 161C USED ON VAV UNITS WITHOUT VARIABLE FREQUENCY DRIVE.

THIS DRAWING IS PROPRIETARY AND SHALL NOT BE COPIED OR ITS CONTENTS DISCLOSED TO OUTSIDE PARTIES WITHOUT THE CONSENT OF TRANE.

TRANE

DRAWN BY: K. EDWARDS
TRANE® DATE: 8/10/09
REPLACES: 2313-0560,0711,0713,0715,0717,0719,0721
REVISION DATE: 12/17/09
CAD SYSTEM USED: PRO/DIAGRAM
SIMILAR TO:

FILE NUMBER: 2313-0611
DRAWING NUMBER: 2313-0613
SHEET: 1 OF 1
REV: B

VOYAGER 3
DIAGRAM
REFRIGERATION CONTROL SCHEMATIC
40T