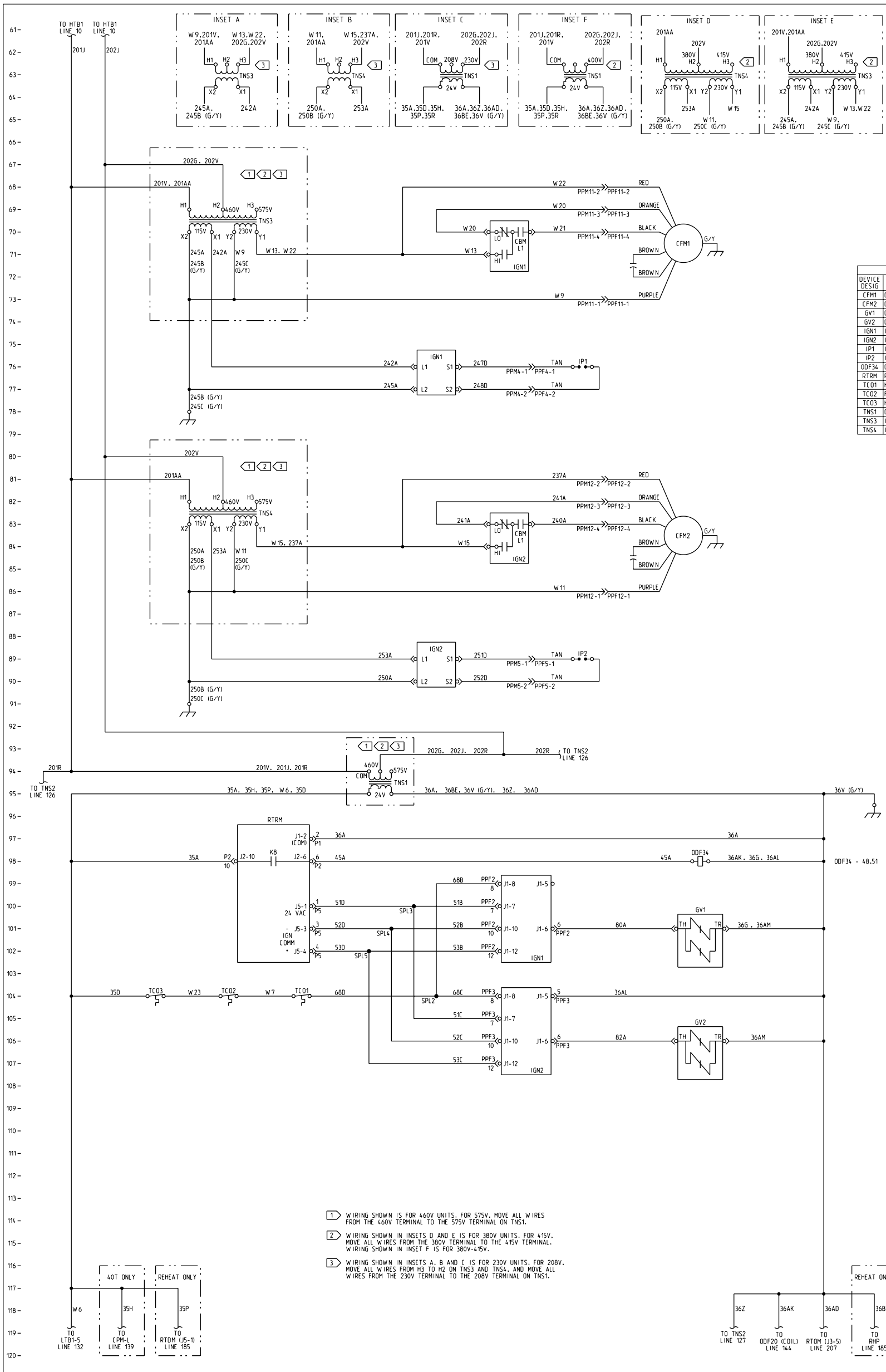

CAUTION

USE COPPER CONDUCTORS ONLY!

UNIT TERMINALS ARE NOT DESIGNED TO ACCEPT OTHER TYPES OF CONDUCTORS.

FAILURE TO DO SO MAY CAUSE DAMAGE TO THE EQUIPMENT.

ATTENTION

N'UTILISER QUE DES CONDUCTEURS EN CUIVRE!

LES BORNES DE L'UNITÉ NE SONT PAS CONÇUES POUR RECEVOIR D'AUTRES TYPES DE CONDUCTEURS.

L'UTILISATION DE TOUT AUTRE CONDUCTEUR PEUT ENDOMMAGER L'ÉQUIPEMENT.

PRECAUCIÓN

¡UTILICE ÚNICAMENTE CONDUCTORES DE COBRE!

LAS TERMINALES DE LA UNIDAD NO ESTÁN DISEÑADAS PARA ACEPTAR OTROS TIPOS DE CONDUCTORES.

SI NO LO HACE, PUEDE OCASIONAR DAÑO AL EQUIPO.

LEGEND

DEVICE DESIG	DESCRIPTION	LINE NUMBER
CFM1	COMBUSTION FAN MOTOR	70.72
CFM2	COMBUSTION FAN MOTOR	83
GV1	GAS VALVE	101
GV2	GAS VALVE	106
IGN1	IGNITION MODULE	70.76.99
IGN2	IGNITION MODULE	83.89.104
IP1	IGNITION PROBE	76
IP2	IGNITION PROBE	89
ODF34	OUTDOOR FAN RELAY	98
RTRM	REFRIGERATION MODULE	98
TC01	HIGH LIMIT CUTOUT #1	104
TC02	FAN FAILURE LIMIT	104
TC03	HIGH LIMIT CUTOUT #2	104
TNS1	CONTROLS POWER TRANSFORMER	94
TNS3	IGNITION TRANSFORMER	69
TNS4	IGNITION TRANSFORMER	82

1. WIRING SHOWN IS FOR 460V UNITS. FOR 575V, MOVE ALL WIRES FROM THE 460V TERMINAL TO THE 575V TERMINAL ON TNS1.
2. WIRING SHOWN IN INSETS D AND E IS FOR 380V UNITS. FOR 415V, MOVE ALL WIRES FROM THE 380V TERMINAL TO THE 415V TERMINAL. WIRING SHOWN IN INSET F IS FOR 380V-415V.
3. WIRING SHOWN IN INSETS A, B AND C IS FOR 230V UNITS. FOR 208V, MOVE ALL WIRES FROM H3 TO H2 ON TNS3 AND TNS4, AND MOVE ALL WIRES FROM THE 230V TERMINAL TO THE 208V TERMINAL ON TNS1.

TRANE

THIS DRAWING IS PROPRIETARY AND SHALL NOT BE COPIED OR ITS CONTENTS DISCLOSED TO OUTSIDE PARTIES WITHOUT THE CONSENT OF TRANE.

DRAWN BY: K. EDWARDS
TRANE® DATE: 8/19/09
REPLACES: 2313-0180
REVISION DATE: --
CAD SYSTEM USED: PRO/DIAGRAM
SIMILAR TO: --

FILE NUMBER: 2313-0602
DRAWING NUMBER: 2313-0604
SHEET: 1 OF 1
REV: A

VOYAGER 3
DIAGRAM
HEAT POWER AND CONTROLS SCHEMATIC
HIGH HEAT GAS