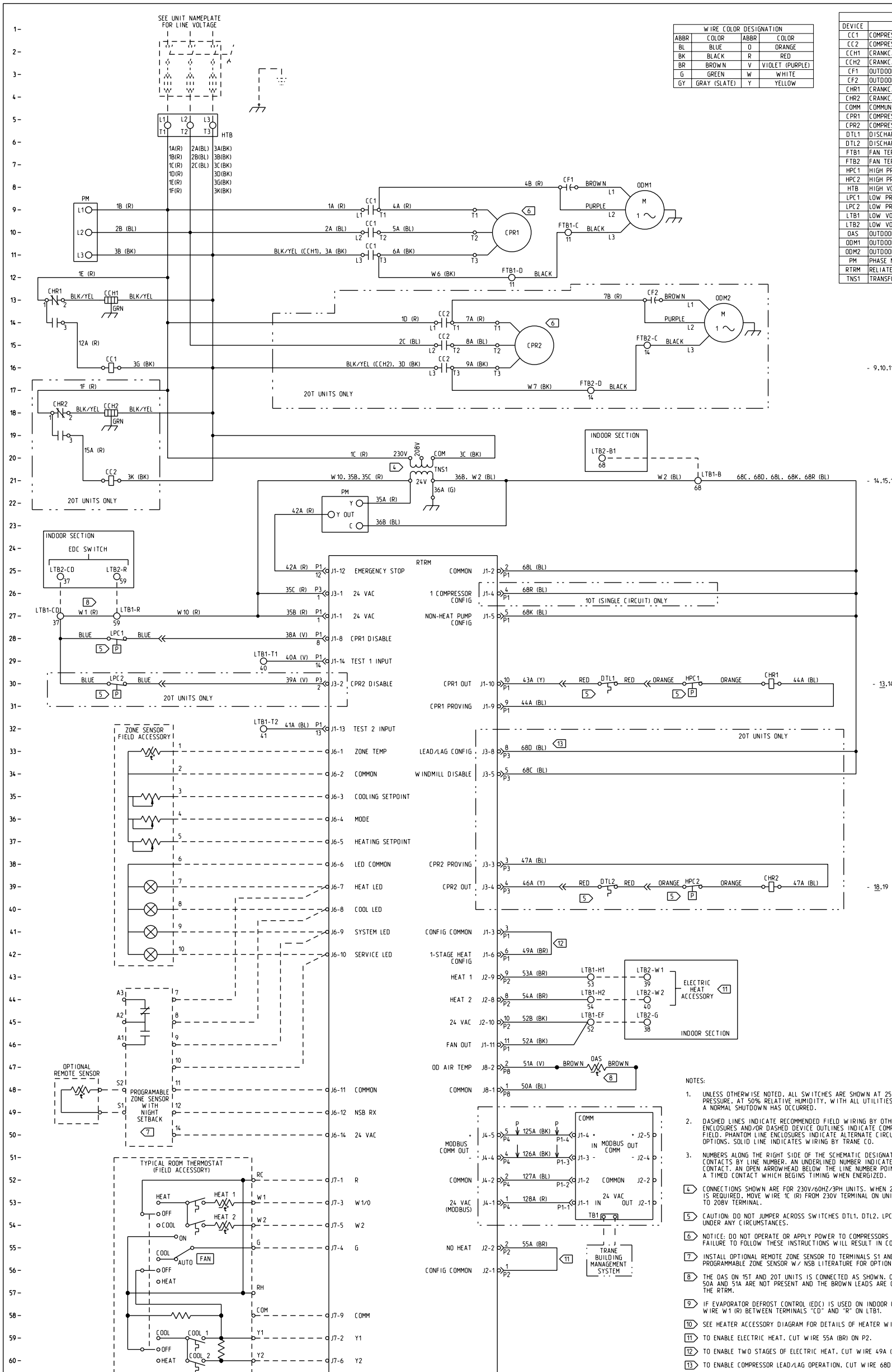

WIRE COLOR DESIGNATION			
ABBR	COLOR	ABBR	COLOR
BL	BLUE	O	ORANGE
BK	BLACK	R	RED
BR	BROWN	V	VIOLET (PURPLE)
G	GREEN	W	WHITE
GY	GRAY (SLATE)	Y	YELLOW

LEGEND		
DEVICE	DESCRIPTION	LINE
CC1	COMPRESSOR CONTACTOR	9.10.11.16
CC2	COMPRESSOR CONTACTOR	14.15.16.21
CCH1	CRANKCASE HEATER	13
CCH2	CRANKCASE HEATER	18
CF1	OUTDOOR FAN CAPACITOR	8
CF2	OUTDOOR FAN CAPACITOR	13
CHR1	CRANKCASE HEATER RELAY	13.30
CHR2	CRANKCASE HEATER RELAY	18.39
COMM	COMMUNICATION INTERFACE MODULE	50
CPR1	COMPRESSOR	10
CPR2	COMPRESSOR	15
DTL1	DISCHARGE TEMPERATURE LIMIT	30
DTL2	DISCHARGE TEMPERATURE LIMIT	39
FTB1	FAN TERMINAL BLOCK	10.12.18
FTB2	FAN TERMINAL BLOCK	15.17
HPC1	HIGH PRESSURE CUTOUT	30
HPC2	HIGH PRESSURE CUTOUT	39
HTB	HIGH VOLTAGE TERMINAL BLOCK	5
LPC1	LOW PRESSURE CUTOUT	28
LPC2	LOW PRESSURE CUTOUT	30
LTB1	LOW VOLTAGE TERMINAL BLOCK	21.27.29.32.43.44.45
LTB2	LOW VOLTAGE TERMINAL BLOCK	20.25.43.44.45
OAS	OUTDOOR AIR TEMP SENSOR	47
ODM1	OUTDOOR FAN MOTOR	8
ODM2	OUTDOOR FAN MOTOR	13
PM	PHASE MONITOR	9.22
RTRM	RELIATEL REFRIGERATION MODULE	26
TNS1	TRANSFORMER - CONDENSER	20

⚠ WARNING

HAZARDOUS VOLTAGE!

DISCONNECT ALL ELECTRIC POWER INCLUDING REMOTE DISCONNECTS AND FOLLOW LOCK OUT AND TAG PROCEDURES BEFORE SERVICING. INSURE THAT ALL MOTOR CAPACITORS HAVE DISCHARGED STORED VOLTAGE. UNITS WITH VARIABLE SPEED DRIVE. REFER TO DRIVE INSTRUCTIONS FOR CAPACITOR DISCHARGE.

FAILURE TO DO THE ABOVE BEFORE SERVICING COULD RESULT IN DEATH OR SERIOUS INJURY.

⚠ AVERTISSEMENT

TENSION DANGEREUSE!

COUPER TOUTES LES TENSIONS ET OUVRIR LES SECTIONNEURS À DISTANCE. PUIS SUIVRE LES PROCÉDURES DE VERROUILLAGE ET DES ÉTIQUETTES AVANT TOUTE INTERVENTION. VÉRIFIER QUE TOUS LES CONDENSATEURS DES MOTEURS SONT DÉCHARGÉS. DANS LE CAS D'UNITÉS COMPORTANT DES ENTRAÎNEMENTS À VITESSE VARIABLE, SE REPORTER AUX INSTRUCTIONS DE L'ENTRAÎNEMENT POUR DÉCHARGER LES CONDENSATEURS.

NE PAS RESPECTER CES MESURES DE PRÉCAUTION PEUT ENTRAÎNER DES BLESSURES GRAVES POUVANT ÊTRE MORTELLES.

⚠ ADVERTENCIA

¡VOLTAJE PELIGROSO!

DESCONECTE TODA LA ENERGÍA ELÉCTRICA, INCLUSO LAS DESCONEXIONES REMOTAS Y SIGA LOS PROCEDIMIENTOS DE CIERRE Y ETIQUETADO ANTES DE PROCEDER AL SERVICIO. ASEGÚRESE DE QUE TODOS LOS CAPACITORES DEL MOTOR HAYAN DESCARGADO EL VOLTAJE ALMACENADO. PARA LAS UNIDADES CON EJE DE DIRECCIÓN DE VELOCIDAD VARIABLE, CONSULTE LAS INSTRUCCIONES PARA LA DESCARGA DEL CONDENSADOR.

EL NO REALIZAR LO ANTERIORMENTE INDICADO, PODRÍA OCASIONAR LA MUERTE O SERIAS LESIONES PERSONALES.

CAUTION

USE COPPER CONDUCTORS ONLY!

UNIT TERMINALS ARE NOT DESIGNED TO ACCEPT OTHER TYPES OF CONDUCTORS.

FAILURE TO DO SO MAY CAUSE DAMAGE TO THE EQUIPMENT.

ATTENTION

N'UTILISER QUE DES CONDUCTEURS EN CUIVRE!

LES BORNES DE L'UNITÉ NE SONT PAS CONÇUES POUR RECEVOIR D'AUTRES TYPES DE CONDUCTEURS.

L'UTILISATION DE TOUT AUTRE CONDUCTEUR PEUT ENDOMMAGER L'ÉQUIPEMENT.

PRECAUCIÓN

¡UTILICE ÚNICAMENTE CONDUCTORES DE COBRE!

LAS TERMINALES DE LA UNIDAD NO ESTÁN DISEÑADAS PARA ACEPTAR OTROS TIPOS DE CONDUCTORES.

SI NO LO HACE, PUEDE OCASIONAR DAÑO AL EQUIPO.

NOTES:

1. UNLESS OTHERWISE NOTED, ALL SWITCHES ARE SHOWN AT 25°C (77°F), AT ATMOSPHERIC PRESSURE, AT 50% RELATIVE HUMIDITY, WITH ALL UTILITIES TURNED OFF, AND AFTER A NORMAL SHUTDOWN HAS OCCURRED.
2. DASHED LINES INDICATE RECOMMENDED FIELD WIRING BY OTHERS. DASHED LINE ENCLOSURES AND/OR DASHED DEVICE OUTLINES INDICATE COMPONENTS PROVIDED BY THE FIELD. PHANTOM LINE ENCLOSURES INDICATE ALTERNATE CIRCUITRY OR AVAILABLE SALES OPTIONS. SOLID LINE INDICATES WIRING BY TRANE CO.
3. NUMBERS ALONG THE RIGHT SIDE OF THE SCHEMATIC DESIGNATE THE LOCATION OF CONTACTS BY LINE NUMBER. AN UNDERLINED NUMBER INDICATES A NORMALLY CLOSED CONTACT. AN OPEN ARROWHEAD BELOW THE LINE NUMBER POINTING UPWARD INDICATES A TIMED CONTACT WHICH BEGINS TIMING WHEN ENERGIZED.

4 CONNECTIONS SHOWN ARE FOR 230V/60HZ/3PH UNITS. WHEN 208V/60HZ/3PH OPERATION IS REQUIRED, MOVE WIRE 1C (R) FROM 230V TERMINAL ON UNIT TRANSFORMER (TNS1) TO 208V TERMINAL.

5 CAUTION: DO NOT JUMPER ACROSS SWITCHES DTL1, DTL2, LPC1, LPC2, HPC1 AND HPC2 UNDER ANY CIRCUMSTANCES.

6 NOTICE: DO NOT OPERATE OR APPLY POWER TO COMPRESSORS WHILE UNDER A VACUUM. FAILURE TO FOLLOW THESE INSTRUCTIONS WILL RESULT IN COMPRESSOR FAILURE.

7 INSTALL OPTIONAL REMOTE ZONE SENSOR TO TERMINALS S1 AND S2 WHEN REQUIRED. SEE PROGRAMMABLE ZONE SENSOR W/ NSB LITERATURE FOR OPTION CONFIGURATION.

8 THE OAS ON 15T AND 20T UNITS IS CONNECTED AS SHOWN. ON SMALLER UNITS, WIRES 50A AND 51A ARE NOT PRESENT AND THE BROWN LEADS ARE CONNECTED DIRECTLY TO THE RTRM.

9 IF EVAPORATOR DEFROST CONTROL (EDC) IS USED ON INDOOR UNIT, REMOVE JUMPER WIRE W1 (R) BETWEEN TERMINALS "CD" AND "R" ON LTB1.

10 SEE HEATER ACCESSORY DIAGRAM FOR DETAILS OF HEATER WIRING.

11 TO ENABLE ELECTRIC HEAT, CUT WIRE 55A (BR) ON P2.

12 TO ENABLE TWO STAGES OF ELECTRIC HEAT, CUT WIRE 49A (BR) ON P1.

13 TO ENABLE COMPRESSOR LEAD/LAG OPERATION, CUT WIRE 68D (BL).

THIS DRAWING IS PROPRIETARY AND SHALL NOT BE COPIED OR ITS CONTENTS DISCLOSED TO OUTSIDE PARTIES WITHOUT THE CONSENT OF TRANE.

TRANE

DRAWN BY: K. EDWARDS
REPLACES:
TRANE® DATE: 3/03/09
REVISION DATE: 4/06/09
CAD SYSTEM USED: PRO/DIAGRAM
SIMILAR TO:

FILE NUMBER:
DRAWING NUMBER: 2313-0407
SHEET: 1 of 1
REV: B

CONDENSER UNIT - COOLING ONLY W/ RELIATEL
10T (SINGLE CIRCUIT) & 20T - 208V-230V/60HZ/3PH

ODYSSEY
DIAGRAM