NOTES:

21 WIRING SHOWN IS FOR HOOKUP WITHOUT COMM. BOARD HOOK PPF14(VAV) OR PPF13(CV) TO RTRM J4. FOR OPTL. COMM. BOARD, HOOK PPF14 OR PPF13 TO COMM J2. P14 TO RTRM J4 AND P21 TO COMM J1. (SEE INSET A FOR WIRE NUMBERS.)

22 WIRE 36AE IS NOT USED FOR THE TC/TE_420 OR TC/TE_600.

24 REQUIRED FOR OPT. REFERENCE ENTHALPY CONTROL.

25 REQUIRED FOR OPT. COMPARATIVE ENTHALPY CONTROL.

26 WIRES 174A REQUIRED ONLY FOR TC (COOLING/NO HEAT) UNITS. WIRES 67B, 65E & 64D REQUIRED ONLY FOR TE (COOLING/ELECTRIC HEAT) UNITS.

28 REQUIRED FOR OPTIONAL POWER EXHAUST.

29 OPTIONAL CLOGGED FILTER SWITCH.

30 REQUIRED FOR OPTIONAL VAV.

37 REQUIRED FOR OPTIONAL 100% POWER EXHAUST

38 REQUIRED FOR OPTIONAL FRESH AIR TRACKING EXHAUST

⚠ WARNING

HAZARDOUS VOLTAGE!

DISCONNECT ALL ELECTRIC POWER INCLUDING REMOTE DISCONNECTS BEFORE SERVICING.

FAILURE TO DISCONNECT POWER BEFORE SERVICING CAN CAUSE SEVERE PERSONAL INJURY OR DEATH.

⚠ AVERTISSEMENT

VOLTAGE HASARDEUX!

DECONNECTEZ TOUTES LES SOURCES ELECTRIQUES INCLUANT LES DISJONCTEURS SITUES A DISTANCE AVANT D'EFFECTUER L'ENTRETIEN.

FAUTE DE DECONNECTER LA SOURCE ELECTRIQUE AVANT D'EFFECTUER L'ENTRETIEN PEUT ENTRAINER DES BLESSURES CORPORELLES SEVERES OU LA MORT.

CAUTION

USE COPPER CONDUCTORS ONLY!

UNIT TERMINALS ARE NOT DESIGNED TO ACCEPT OTHER TYPES OF CONDUCTORS.

FAILURE TO DO SO MAY CAUSE DAMAGE TO THE EQUIPMENT.

IMPORTANT!

DO NOT ENERGIZE UNIT UNTIL CHECK-OUT AND START-UP PROCEDURE HAS BEEN COMPLETED.

	FUSE REPLACEMENT TABLE		
FU1	208-230V	CLASS CC	20 AMP
FU2			
FU3	208-230V	CLASS CC	20 AMP
FU4			
FU5	208-230V	CLASS CC	15 AMP
FU6			
FU30			
FU20	208-230V	CLASS CC	10 AMP
FU21			
FU11-	208-230V	TYPE RK5	60 AMP
FU19			

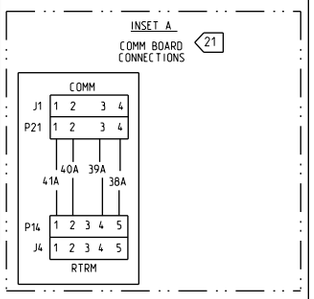

CONDENSER SECTION WIRING

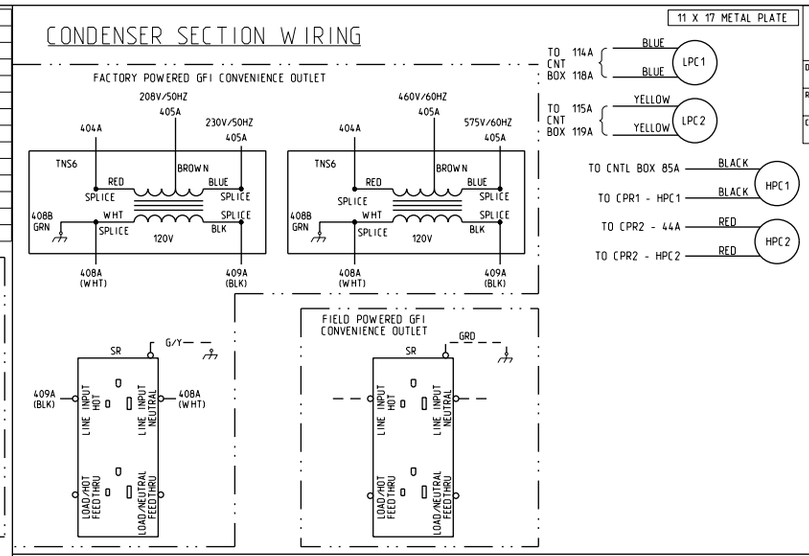

HEAT SECTION WIRING

54 KW HEAT

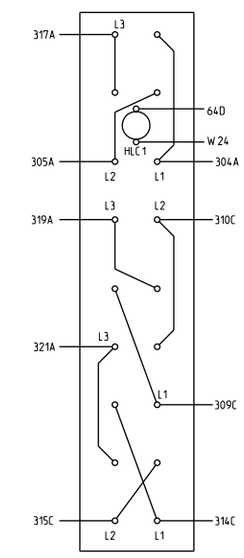

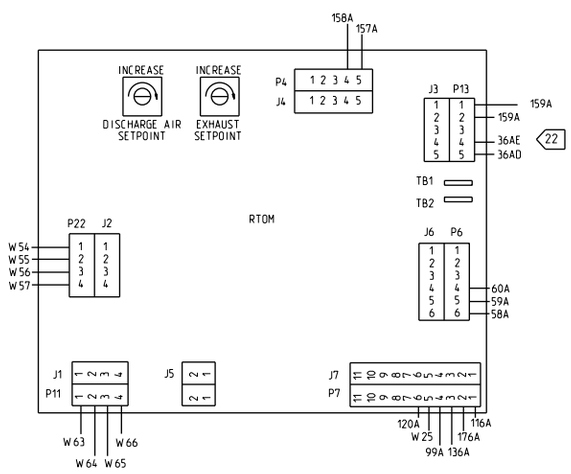

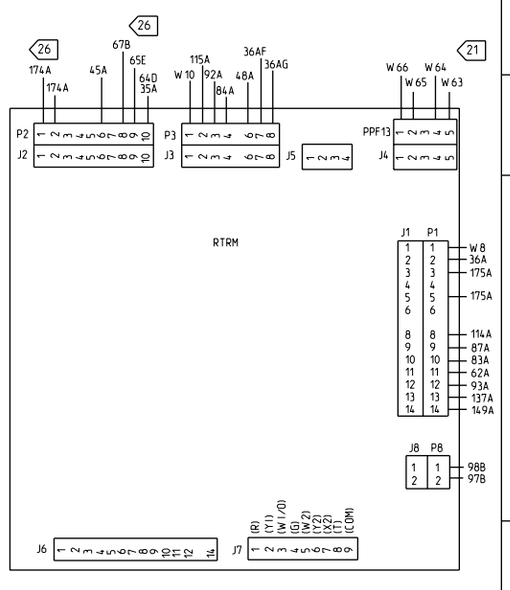

RETURN AIR SECTION WIRING

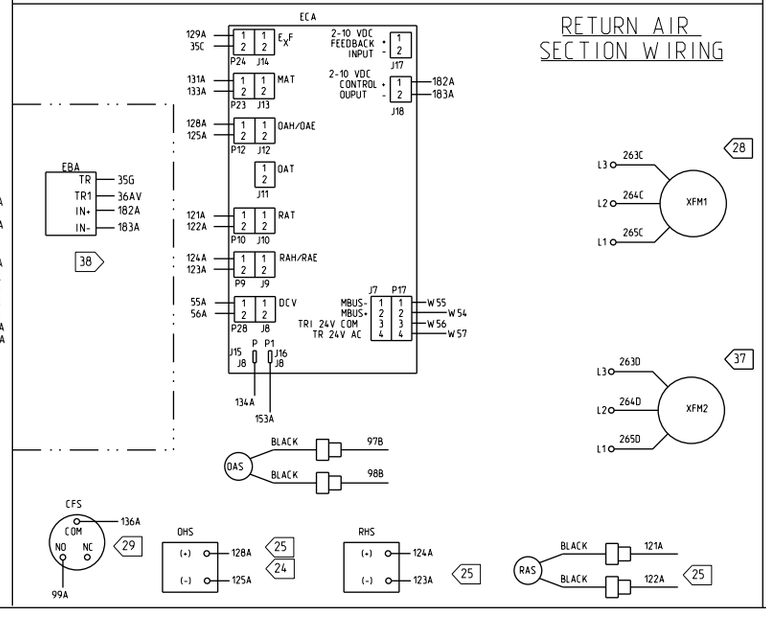

SUPPLY AIR SECTION WIRING

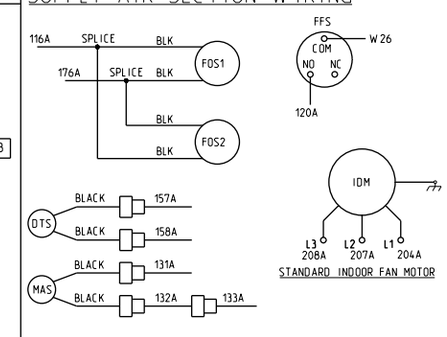

TRANE

THIS DRAWING IS PROPRIETARY AND SHALL NOT BE COPIED OR ITS CONTENTS DISCLOSED TO OUTSIDE PARTIES WITHOUT THE CONSENT OF TRANE.

DRAWN BY: D. SHANNON	TRANE® DATE: 9-9-08
REPLACES: -	REVISION DATE: 10-16-08
CAD SYSTEM USED: PRO/E	SIMILAR TO: 2309-3534

FILE NUMBER:	DRAWING NUMBER:	SHEET:	REV
2313-0207	2313-0221	1 OF 1	C

VOYAGER 3

54KW TE & TC

40 TON - 208-230 VOLT

CONSTANT VOLUME