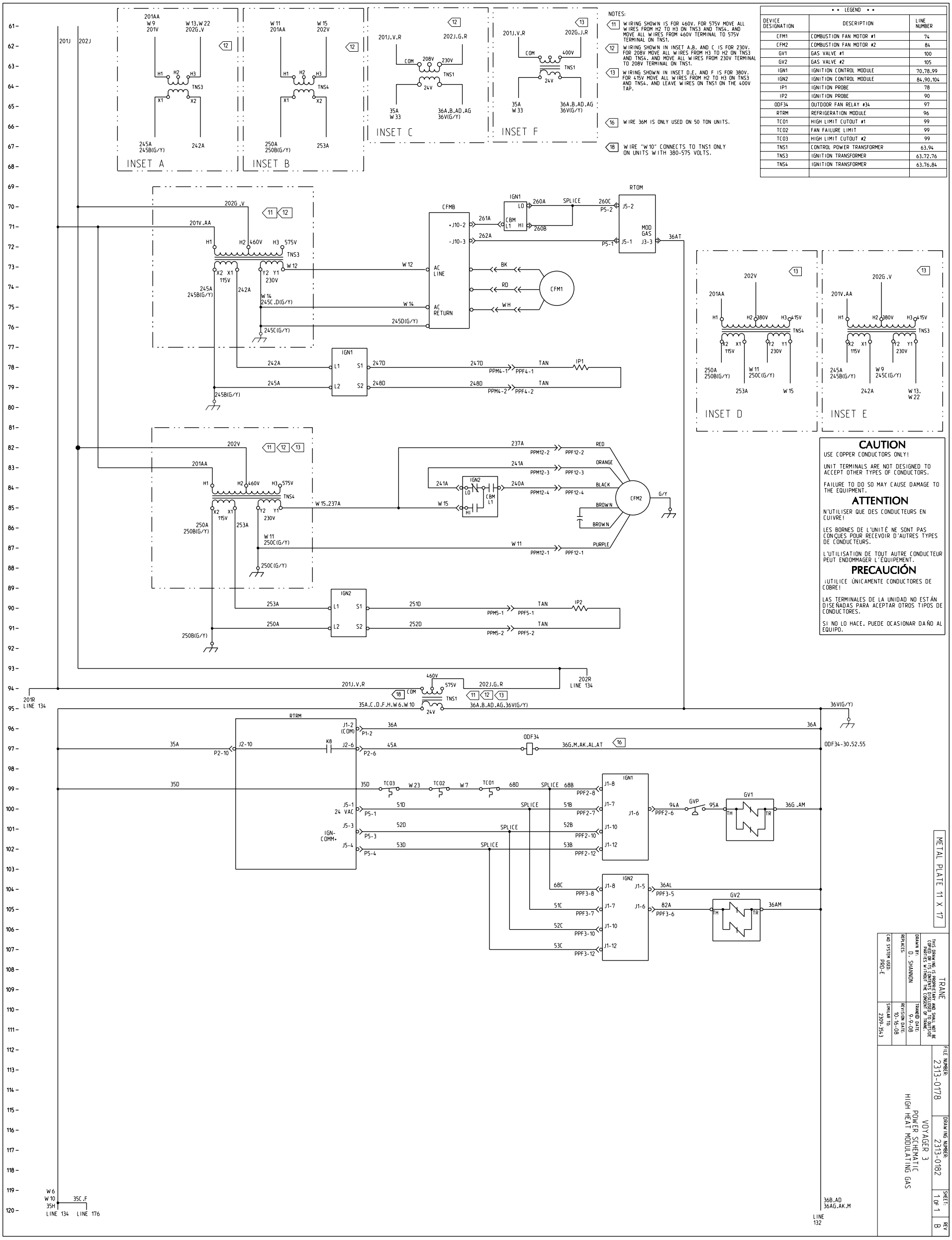

NOTES:

11 WIRING SHOWN IS FOR 460V. FOR 575V MOVE ALL WIRES FROM H2 TO H3 ON TNS3 AND TNS4. AND MOVE ALL WIRES FROM 460V TERMINAL TO 575V TERMINAL ON TNS1.

12 WIRING SHOWN IN INSET A.B. AND C IS FOR 230V. FOR 208V MOVE ALL WIRES FROM H3 TO H2 ON TNS3 AND TNS4. AND MOVE ALL WIRES FROM 230V TERMINAL TO 208V TERMINAL ON TNS1.

13 WIRING SHOWN IN INSET D.E. AND F IS FOR 380V. FOR 415V MOVE ALL WIRES FROM H2 TO H3 ON TNS3 AND TNS4. AND LEAVE WIRES ON TNS1 ON THE 400V TAP.

16 WIRE 36M IS ONLY USED ON 50 TON UNITS.

18 WIRE "W10" CONNECTS TO TNS1 ONLY ON UNITS WITH 380-575 VOLTS.

• • LEGEND • •

DEVICE DESIGNATION	DESCRIPTION	LINE NUMBER
CFM1	COMBUSTION FAN MOTOR #1	74
CFM2	COMBUSTION FAN MOTOR #2	84
GV1	GAS VALVE #1	100
GV2	GAS VALVE #2	105
IGN1	IGNITION CONTROL MODULE	70.78.99
IGN2	IGNITION CONTROL MODULE	84.90.104
IP1	IGNITION PROBE	78
IP2	IGNITION PROBE	90
ODF34	OUTDOOR FAN RELAY #34	97
RTRM	REFRIGERATION MODULE	96
TCO1	HIGH LIMIT CUTOUT #1	99
TCO2	FAN FAILURE LIMIT	99
TCO3	HIGH LIMIT CUTOUT #2	99
TNS1	CONTROL POWER TRANSFORMER	63.94
TNS3	IGNITION TRANSFORMER	63.72.76
TNS4	IGNITION TRANSFORMER	63.76.84

CAUTION

USE COPPER CONDUCTORS ONLY!

UNIT TERMINALS ARE NOT DESIGNED TO ACCEPT OTHER TYPES OF CONDUCTORS.

FAILURE TO DO SO MAY CAUSE DAMAGE TO THE EQUIPMENT.

ATTENTION

N'UTILISER QUE DES CONDUCTEURS EN CUIVRE!

LES BORNES DE L'UNITÉ NE SONT PAS CONÇUES POUR RECEVOIR D'AUTRES TYPES DE CONDUCTEURS.

L'UTILISATION DE TOUT AUTRE CONDUCTEUR PEUT ENDOMMAGER L'ÉQUIPEMENT.

PRECAUCIÓN

¡UTILICE ÚNICAMENTE CONDUCTORES DE COBRE!

LAS TERMINALES DE LA UNIDAD NO ESTÁN DISEÑADAS PARA ACEPTAR OTROS TIPOS DE CONDUCTORES.

SI NO LO HACE, PUEDE OCASIONAR DAÑO AL EQUIPO.

METAL PLATE 11 X 17

TRANE

THIS DRAWING IS PROPRIETARY AND SHALL NOT BE COPIED OR ITS CONTENTS DISCLOSED TO OUTSIDE PARTIES WITHOUT THE CONSENT OF TRANE.

DRAWN BY: D. SHANNON
TRANE® DATE: 9-9-08
REPLACES:
REVISION DATE: 10-16-08
CAD SYSTEM USED: PRO-E
SIMILAR TO: 2309-3543

FILE NUMBER: 2313-0178
DRAWING NUMBER: 2313-0182
SHEET: 1 OF 1
REV: B

VOYAGER 3
POWER SCHEMATIC
HIGH HEAT MODULATING GAS