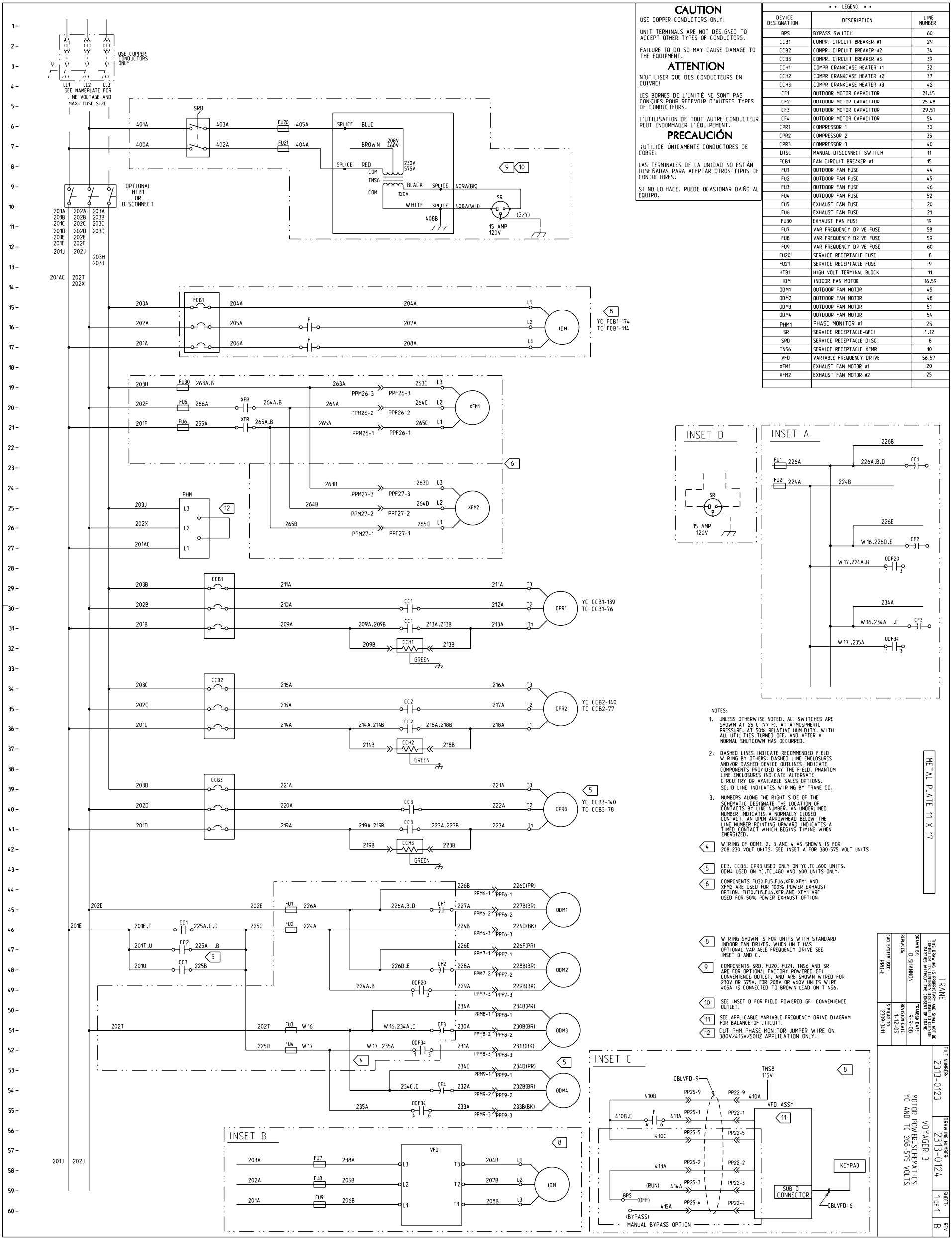

CAUTION

USE COPPER CONDUCTORS ONLY!

UNIT TERMINALS ARE NOT DESIGNED TO ACCEPT OTHER TYPES OF CONDUCTORS.

FAILURE TO DO SO MAY CAUSE DAMAGE TO THE EQUIPMENT.

ATTENTION

N'UTILISER QUE DES CONDUCTEURS EN CUIVRE!

LES BORNES DE L'UNITÉ NE SONT PAS CONÇUES POUR RECEVOIR D'AUTRES TYPES DE CONDUCTEURS.

L'UTILISATION DE TOUT AUTRE CONDUCTEUR PEUT ENDOMMAGER L'ÉQUIPEMENT.

PRECAUCIÓN

¡UTILICE ÚNICAMENTE CONDUCTORES DE COBRE!

LAS TERMINALES DE LA UNIDAD NO ESTÁN DISEÑADAS PARA ACEPTAR OTROS TIPOS DE CONDUCTORES.

SI NO LO HACE, PUEDE OCASIONAR DAÑO AL EQUIPO.

• • LEGEND • •

DEVICE DESIGNATION	DESCRIPTION	LINE NUMBER
BPS	BYPASS SWITCH	60
CCB1	COMPR. CIRCUIT BREAKER #1	29
CCB2	COMPR. CIRCUIT BREAKER #2	34
CCB3	COMPR. CIRCUIT BREAKER #3	39
CCH1	COMPR CRANKCASE HEATER #1	32
CCH2	COMPR CRANKCASE HEATER #2	37
CCH3	COMPR CRANKCASE HEATER #3	42
CF1	OUTDOOR MOTOR CAPACITOR	21.45
CF2	OUTDOOR MOTOR CAPACITOR	25.48
CF3	OUTDOOR MOTOR CAPACITOR	29.51
CF4	OUTDOOR MOTOR CAPACITOR	54
CPR1	COMPRESSOR 1	30
CPR2	COMPRESSOR 2	35
CPR3	COMPRESSOR 3	40
DISC	MANUAL DISCONNECT SWITCH	11
FCB1	FAN CIRCUIT BREAKER #1	15
FU1	OUTDOOR FAN FUSE	44
FU2	OUTDOOR FAN FUSE	45
FU3	OUTDOOR FAN FUSE	46
FU4	OUTDOOR FAN FUSE	52
FU5	EXHAUST FAN FUSE	20
FU6	EXHAUST FAN FUSE	21
FU30	EXHAUST FAN FUSE	19
FU7	VAR FREQUENCY DRIVE FUSE	58
FU8	VAR FREQUENCY DRIVE FUSE	59
FU9	VAR FREQUENCY DRIVE FUSE	60
FU20	SERVICE RECEPTACLE FUSE	8
FU21	SERVICE RECEPTACLE FUSE	9
HTB1	HIGH VOLT TERMINAL BLOCK	11
IDM	INDOOR FAN MOTOR	16.59
ODM1	OUTDOOR FAN MOTOR	45
ODM2	OUTDOOR FAN MOTOR	48
ODM3	OUTDOOR FAN MOTOR	51
ODM4	OUTDOOR FAN MOTOR	54
PHM1	PHASE MONITOR #1	25
SR	SERVICE RECEPTACLE-GFCI	4.12
SRD	SERVICE RECEPTACLE DISC.	8
TNS6	SERVICE RECEPTACLE XFMR	10
VFD	VARIABLE FREQUENCY DRIVE	56.57
XFM1	EXHAUST FAN MOTOR #1	20
XFM2	EXHAUST FAN MOTOR #2	25

NOTES:

1. UNLESS OTHERWISE NOTED, ALL SWITCHES ARE SHOWN AT 25 C (77 F), AT ATMOSPHERIC PRESSURE, AT 50% RELATIVE HUMIDITY, WITH ALL UTILITIES TURNED OFF, AND AFTER A NORMAL SHUTDOWN HAS OCCURRED.
2. DASHED LINES INDICATE RECOMMENDED FIELD WIRING BY OTHERS. DASHED LINE ENCLOSURES AND/OR DASHED DEVICE OUTLINES INDICATE COMPONENTS PROVIDED BY THE FIELD. PHANTOM LINE ENCLOSURES INDICATE ALTERNATE CIRCUITRY OR AVAILABLE SALES OPTIONS. SOLID LINE INDICATES WIRING BY TRANE CO.
3. NUMBERS ALONG THE RIGHT SIDE OF THE SCHEMATIC DESIGNATE THE LOCATION OF CONTACTS BY LINE NUMBER. AN UNDERLINED NUMBER INDICATES A NORMALLY CLOSED CONTACT. AN OPEN ARROWHEAD BELOW THE LINE NUMBER POINTING UPWARD INDICATES A TIMED CONTACT WHICH BEGINS TIMING WHEN ENERGIZED.

4 WIRING OF ODM1, 2, 3 AND 4 AS SHOWN IS FOR 208-230 VOLT UNITS. SEE INSET A FOR 380-575 VOLT UNITS.

5 CC3, CCB3, CPR3 USED ONLY ON YC,TC_600 UNITS. ODM4 USED ON YC,TC_480 AND 600 UNITS ONLY.

6 COMPONENTS FU30,FU5,FU6,XFR,XFM1 AND XFM2 ARE USED FOR 100% POWER EXHAUST OPTION. FU30,FU5,FU6,XFR,AND XFM1 ARE USED FOR 50% POWER EXHAUST OPTION.

8 WIRING SHOWN IS FOR UNITS WITH STANDARD INDOOR FAN DRIVES. WHEN UNIT HAS OPTIONAL VARIABLE FREQUENCY DRIVE SEE INSET B AND C.

9 COMPONENTS SRD, FU20, FU21, TNS6 AND SR ARE FOR OPTIONAL FACTORY POWERED GFI CONVENIENCE OUTLET, AND ARE SHOWN WIRED FOR 230V OR 575V. FOR 208V OR 460V UNITS WIRE 405A IS CONNECTED TO BROWN LEAD ON T NS6.

10 SEE INSET D FOR FIELD POWERED GFI CONVENIENCE OUTLET.

11 SEE APPLICABLE VARIABLE FREQUENCY DRIVE DIAGRAM FOR BALANCE OF CIRCUIT.

12 CUT PHM PHASE MONITOR JUMPER WIRE ON 380V/415V/50HZ APPLICATION ONLY.

METAL PLATE 11 X 17

THIS DRAWING IS PROPRIETARY AND SHALL NOT BE COPIED OR ITS CONTENTS DISCLOSED TO OUTSIDE PARTIES WITHOUT THE CONSENT OF TRANE.

TRANE

DRAWN BY: D.SHANNON | TRANE® DATE: 9-9-08
REPLACES: | REVISION DATE: 1-12-09
CAD SYSTEM USED: PRO-E | SIMILAR TO: 2309-3411

FILE NUMBER: 2313-0123
DRAWING NUMBER: 2313-0124
SHEET: 1 OF 1
REV: B

MOTOR POWER-SCHEMATICS
YC AND TC 208-575 VOLTS
VOYAGER 3