CAUTION

USE COPPER CONDUCTORS ONLY!

UNIT TERMINALS ARE NOT DESIGNED TO ACCEPT OTHER TYPES OF CONDUCTORS.

FAILURE TO DO SO MAY CAUSE DAMAGE TO THE EQUIPMENT.

PRECAUCIÓN

N'UTILISER QUE DES CONDUCTEURS EN CUIVRE!

LES BORNES DE L'UNITÉ NE SONT PAS CONÇUES POUR RECEVOIR D'AUTRES TYPES DE CONDUCTEURS.

L'UTILISATION DE TOUT AUTRE CONDUCTEUR PEUT ENDOMMAGER L'ÉQUIPEMENT.

ATTENTION

¡UTILICE ÚNICAMENTE CONDUCTORES DE COBRE!

LAS TERMINALES DE LA UNIDAD NO ESTÁN DISEÑADAS PARA ACEPTAR OTROS TIPOS DE CONDUCTORES.

SI NO LO HACE, PUEDE OCASIONAR DAÑO AL EQUIPO.

⚠ WARNING

HAZARDOUS VOLTAGE!

DISCONNECT ALL ELECTRIC POWER INCLUDING REMOTE DISCONNECTS AND FOLLOW LOCK OUT AND TAG PROCEDURES BEFORE SERVICING. INSURE THAT ALL MOTOR CAPACITORS HAVE DISCHARGED STORED VOLTAGE. UNITS WITH VARIABLE SPEED DRIVE, REFER TO DRIVE INSTRUCTIONS FOR CAPACITOR DISCHARGE.

FAILURE TO DO THE ABOVE BEFORE SERVICING COULD RESULT IN DEATH OR SERIOUS INJURY.

⚠ AVERTISSEMENT

TENSION DANGEREUSE!

COUPER TOUTES LES TENSIONS ET OUVRIR LES SECTIONNEURS À DISTANCE. PUIS SUIVRE LES PROCÉDURES DE VERROUILLAGE ET DES ÉTIQUETTES AVANT TOUTE INTERVENTION. VÉRIFIER QUE TOUS LES CONDENSATEURS DES MOTEURS SONT DÉCHARGÉS. DANS LE CAS D'UNITÉS COMPORTANT DES ENTRAÎNEMENTS À VITESSE VARAIBLE, SE REPORTER AUX INSTRUCTIONS DE L'ENTRAÎNEMENT POUR DÉCHARGER LES CONDENSATEURS.

NE PAS RESPECTER CES MESURES DE PRÉCAUTION PEUT ENTRAÎNER DES BLESSURES GRAVES POUVANT ÊTRE MORTELLES.

⚠ ADVERTENCIA

¡VOLTAJE PELIGROSO!

DESCONECTE TODA LA ENERGÍA ELÉCTRICA, INCLUSO LAS DESCONEXIONES REMOTAS Y SIGA LOS PROCEDIMIENTOS DE CIERRE Y ETIQUETADO ANTES DE PROCEDER AL SERVICIO. ASEGÚRESE DE QUE TODOS LOS CAPACITORES DEL MOTOR HAYAN DESCARGADO EL VOLTAJE ALMACENADO. PARA LAS UNIDADES CON EJE DE DIRECCIÓN DE VELOCIDAD VARIABLE, CONSULTE LAS INSTRUCCIONES PARA LA DESCARGA DEL CONDENSADOR.

EL NO REALIZAR LO ANTERIORMENTE INDICADO, PODRÍA OCASIONAR LA MUERTE O SERIAS LESIONES PERSONALES.

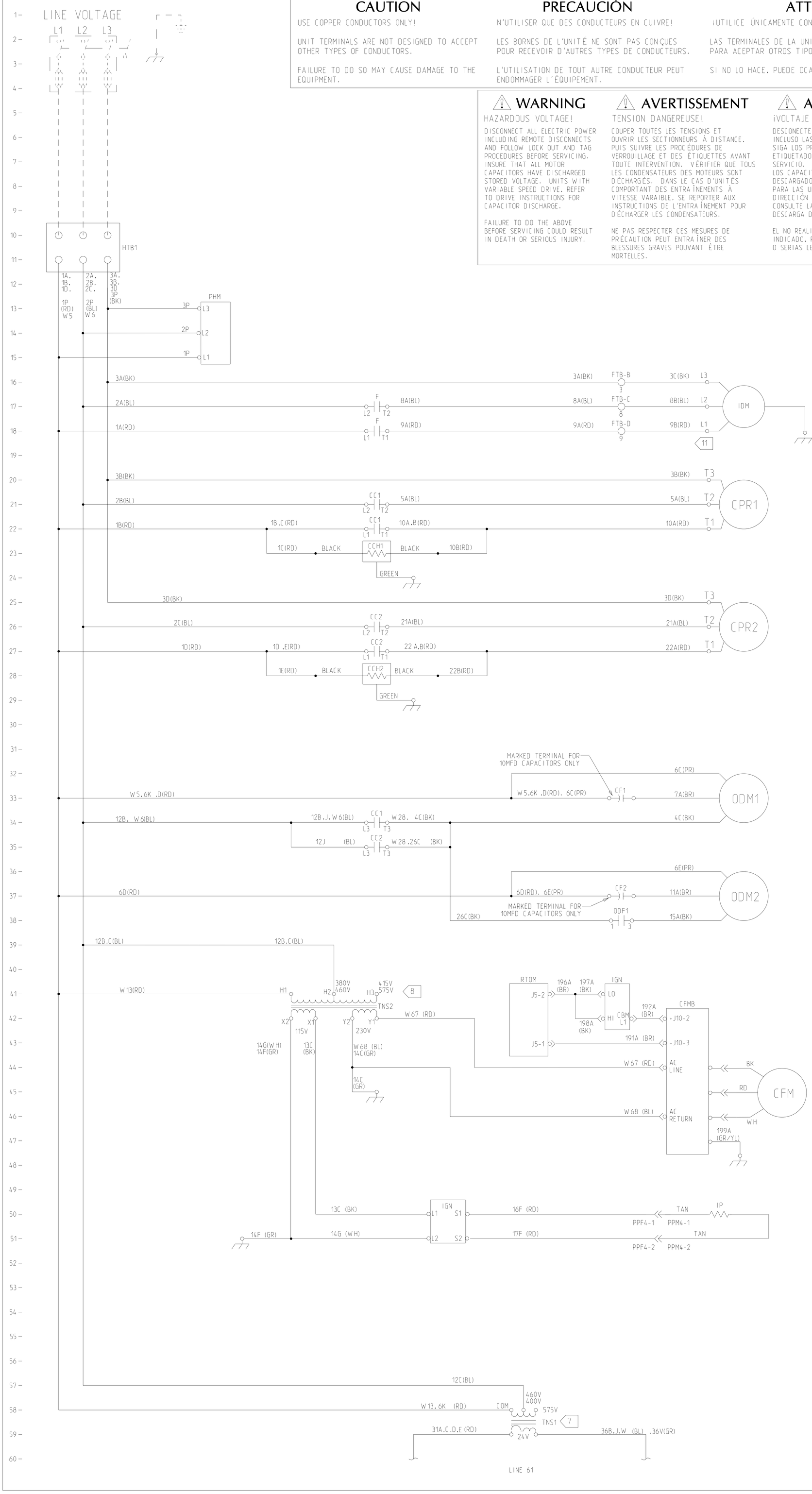

LEGEND		
DEVICE DESIGNATION	DESCRIPTION	LINE NUMBER
BMS	BUILDING MANAGEMENT SYSTEM	91
CC1,CC2	COMPRESSOR CONTACTOR	64,65
CCH1,CCH2	CRANKCASE HEATER	23,28
CF1,CF2	OUTDOOR MOTOR CAPACITOR	33,37
CFM	COMBUSTION FAN MOTOR	43
CFMB	COMBUSTION FAN MOTOR BOARD	42
CFS	CLOGGED FILTER SWITCH	98
CPR1,CPR2	COMPRESSOR	21,26
EXF	EXHAUST FAN RELAY	
DTS	DISCHARGE TEMPERATURE SENSOR	91
ECA	ECONOMIZER ACTUATOR	93
FFS	FAN FAILURE SWITCH	100
F	INDOOR FAN CONTACTOR	17,18
RTOM	RELIATEL OPTIONS MODULE	
RTRM	RELIATEL REFRIGERATION MODULE	
COMM	COMMUNICATION MODULE	
FTB	FAN TERMINAL BLOCK	16,17,18
GV	GAS VALVE	76
HPC1,HPC2	HIGH PRESSURE CONTROL	64,65
HTB1	HI VOLTAGE TERMINAL BLOCK	10
IDM	INDOOR FAN MOTOR	17
IGN	IGNITION CONTROL MODULE	74,50
IP	IGNITION PROBE	50
LTB	LOW VOLTAGE TERM BLOCK	64
LPC1,LPC2	LOW PRESSURE CONTROL	78,80
LPC3	LOW PRESSURE CONTROL	71
OAS	OUTDOOR AIR SENSOR	70
OHS	OUTDOOR HUMIDITY SENSOR	100
ODM1,ODM2	OUTDOOR FAN MOTOR	33,37
ODF1,ODF2	OUTDOOR FAN RELAY	69,68,34,38
RAS	RETURN AIR SENSOR	96
RHS	RETURN HUMIDITY SENSOR	98
RHT	RETURN HIGH TEMPERATURE	66
RMP	REMOTE MINIMUM POSITION	98
SAS	SUPPLY AIR SENSOR	91
SHT	SUPPLY HIGH TEMPERATURE	66
TCI	TRANE COMMUNICATION INTERFACE	63
TIOR	TIMED OVERIDE	69
TCO1	HIGH LIMIT CUTOUT	72
TCO2	FAN FAILURE LIMIT	72
TNS1	CONTROL POWER TRANSFORMER	58
TNS2	IGNITION TRANSFORMER	41
RHV	REHEAT VALVE	71
SHS	SPACE HUMIDITY SENSOR	81
PHM	PHASE MONITOR	13-15
XFR	EXHAUST FAN RELAY	99
ZSM	ZONE SENSOR MODULE	80
TDL1	THERMOSTAT DISCHARGE LINE CKT 1	
TDL2	THERMOSTAT DISCHARGE LINE CKT 2	
PPF6,PPM6	ECONOMIZER PLUG	90-102
PPF3	IGNITION CONTROL PLUG	50,75
PPF4,PPM4	IGNITER PLUG	50
PPF11,PPM11	COMBUSTION FAN MOTOR PLUG	41-46

NOTES:

1. UNLESS OTHERWISE NOTED ALL SWITCHES ARE SHOWN AT 25°C (77°F), AT ATMOSPHERIC PRESSURE, AT 50% RELATIVE HUMIDITY, WITH ALL UTILITIES TURNED OFF, AND AFTER A NORMAL SHUTDOWN HAS OCCURED. ALL THERMISTORS ARE 10K AT 25°C (77°F).
2. DASHED LINES INDICATE RECOMMENDED FIELD WIRING BY OTHERS. DASHED LINE ENCLOSURES AND/OR DASHED DEVICE OUTLINES INDICATE COMPONENTS PROVIDED BY THE FIELD. PHANTOM LINE ENCLOSURES INDICATE ALTERNATE CIRCUITRY OR AVAILABLE SALES OPTIONS.
3. NUMBERS ALONG THE RIGHT SIDE OF THE SCHEMATIC DESIGNATE THE LOCATION OF CONTACTS BY LINE NUMBER. AN UNDERLINED NUMBER INDICATES A NORMALLY CLOSED CONTACT.
4. THREE PHASE MOTORS ARE PROTECTED UNDER PRIMARY SINGLE PHASING CONDITIONS. ALL MOTORS HAVE INTERNAL OVERLOAD PROTECTION. COMPRESSORS HAVE INTERNAL THERMAL PROTECTION.

7 CONNECTIONS SHOWN ARE FOR 460V/60HZ/3PH OR 380-415V/50HZ/3PH. WHEN 575V/60HZ/3PH UNIT OPERATION IS REQUIRED, REMOVE WIRE 12C(BL) FROM 460V/400V TERMINAL ON TNS1 AND CONNECT TO 575V TERMINAL ON TNS1.

8 CONNECTIONS SHOWN ARE FOR 460V/60HZ/3PH OR 380V/50HZ/3PH. WHEN 575V/60HZ/3PH OR 415V/50HZ/3PH UNIT OPERATION IS REQUIRED, REMOVE WIRES 12B.C(BL) FROM H2 TERMINAL ON TNS2, AND CONNECT TO H3 TERMINAL ON TNS2

11 TERMINALS MAY NOT BE PRESENT.

WIRE COLOR DESIGNATION			
ABBR	COLOR	ABBR	COLOR
BK	BLACK	PR	PURPLE
BL	BLUE	RD	RED
BR	BROWN	WH	WHITE
GR	GREEN	YL	YELLOW
OR	ORANGE	TN	TAN

11 X 17 METAL PLATE

TRANE

THIS DRAWING IS PROPRIETARY AND SHALL NOT BE COPIED OR ITS CONTENTS DISCLOSED TO OUTSIDE PARTIES WITHOUT THE CONSENT OF TRANE.

DRAWN BY: TRANE© DATE:

REPLACES: REVISION DATE: 06/06/07

CAD SYSTEM USED: 2309-3110 SIMILAR TO: 2309-3810

FILE NUMBER: 2309-3110

DRAWING NUMBER: 2313-0065

SHEET: 1 OF 1

REV: A

400-575V
MOD HEAT POWER RELIATEL
YC
151E

NAME:CLKLEE07 OBJECT:2309_3110 DATE:11-Jul-08 07:12:49