TRANE
A CONVERGENT ENERGY SOLUTION COMPANY
THIS DRAWING IS PROPRIETARY AND SHALL NOT BE COPIED OR ITS CONTENTS DISCLOSED TO OUTSIDE PARTIES WITHOUT THE WRITTEN CONSENT OF TRANE

DRAWN BY: K.M. KULIG DATE: 28 AUG 2007
REPLACES:
REVISION DATE:
SIMILIAR TO: 2309–2181

2311–0549 SHEET 1 OF 1 REV A

# CONNECTION DIAGRAM

FACTORY UNIT WIRING

UNIT MOUNTED CONTROLS USED WITH ALL STARTERS & ADAPTIVE FREQ DRIVES
CVHE–CVHF–CVHG–CDHF–CDHG
STANDARD UNITS

## DEVICE PREFIX CODE

1 = MAIN UNIT CONTROL PANEL DEVICE
2 = STARTER PANEL DEVICE
3 = PURGE DEVICE
4 = UNIT MOUNTED DEVICE

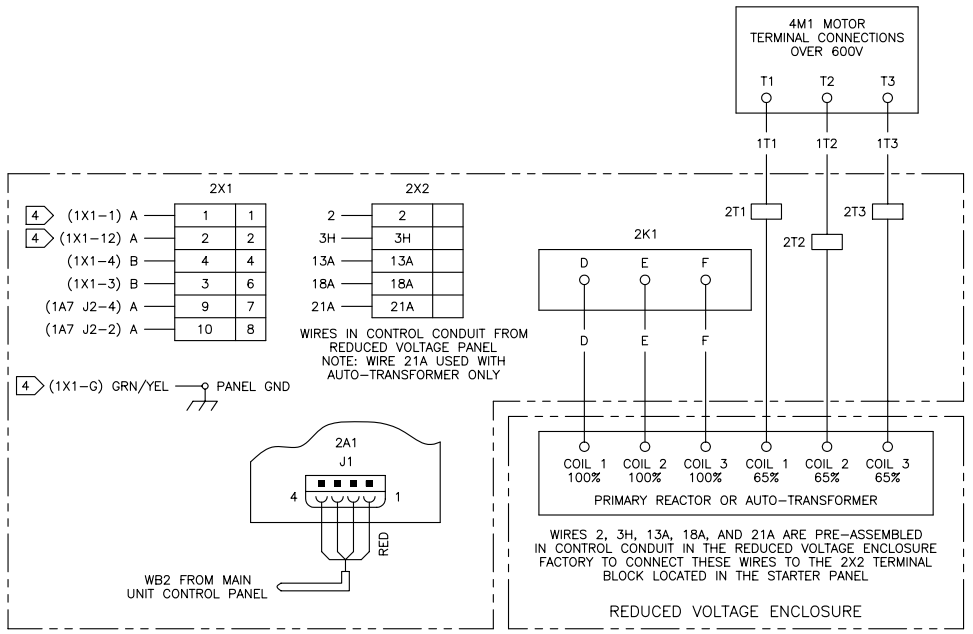


UNIT MOUNTED AUTO–TRANSFORMER OR PRIMARY REACTOR STARTER
(WIRING NOT INSTALLED WITH REMOTE MOUNTED OR CUSTOMER SUPPLIED STARTER)

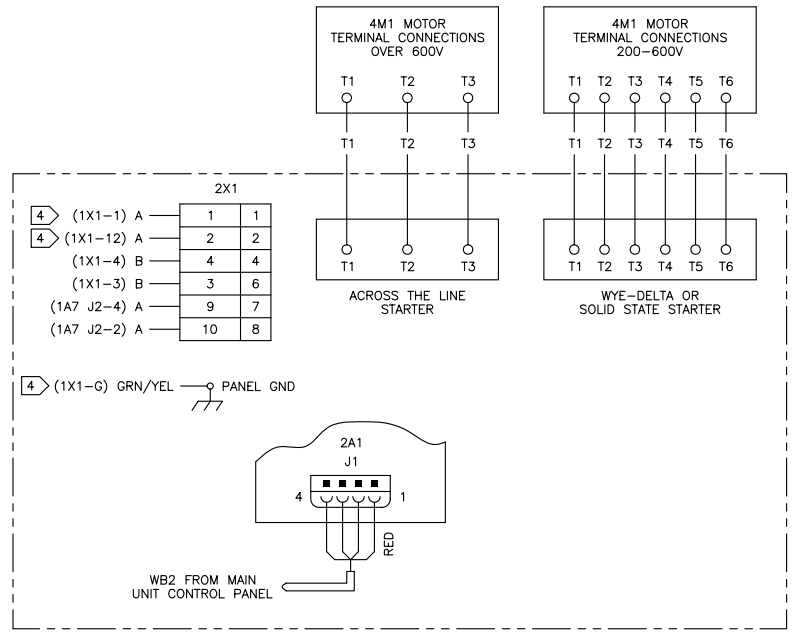


UNIT MOUNTED WYE–DELTA, SOLID STATE OR ACROSS THE LINE STARTER
(WIRING NOT INSTALLED WITH REMOTE MOUNTED OR CUSTOMER SUPPLIED STARTER)

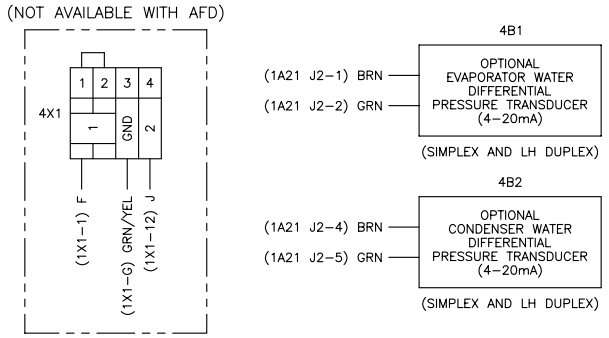


## NOTES:

1. UNIT MOUNTED CONTROL WIRING SHOWN. WHEN WIRING IS SHOWN TO A DEVICE INTERNAL TO THE MAIN UNIT OR PURGE CONTROL PANEL, REFER TO THE MAIN UNIT CONTROL PANEL AND PURGE CONNECTION DIAGRAMS FOR WIRE CONNECTION POINTS.

2. ON SIMPLEX UNITS, WATER TEMPERATURE SENSORS MAY BE CONNECTED TO COMMUNICATION LINK CABLE WB2 FOR RH END OR WB3 FOR LH END DEPENDING ON WATER BOX PASS ARRANGEMENT. ON DUPLEX UNITS, SENSORS MAY BE CONNECTED TO WB2 COMING FROM THE RH PANEL FOR RH END CONNECTIONS AND WB3 COMING FROM THE LH PANEL FOR LH END CONNECTIONS.

3. STANDARD INLET GUIDE VANE ACTUATOR CONNECTIONS SHOWN. ON DUPLEX UNITS, IF THE 1A2 SECOND POWER SUPPLY IS NOT PRESENT IN THE RH DUPLEX CONTROL PANEL, 4M2 AND 4M4 ARE CONNECTED TO WB3.

4. STANDARD WIRING SHOWN. WHEN CONTROL POWER TRANSFORMER (CPTR OPTION) IS PRESENT, WIRE 1A IS NOT USED. WIRE 2A CHANGES FROM 8 TO 16 AWG AND CONNECTS TO 1X1–13. STARTER PANEL GRN/YEL GROUND WIRE CHANGES FROM 8 TO 16 AWG.

5. 6–LEAD MOTOR SHOWN. 440E FRAME MOTORS ARE 3–LEAD.

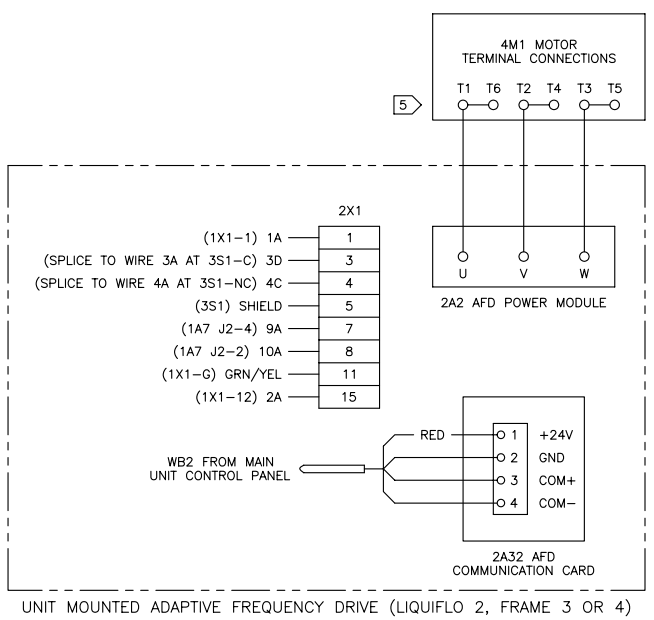


UNIT MOUNTED ADAPTIVE FREQUENCY DRIVE (LIQUIFLO 2, FRAME 3 OR 4)

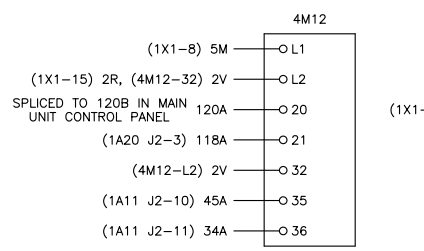


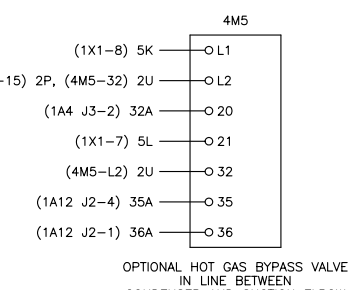


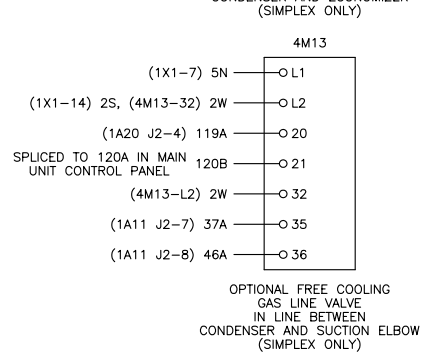


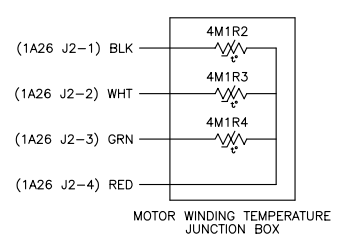


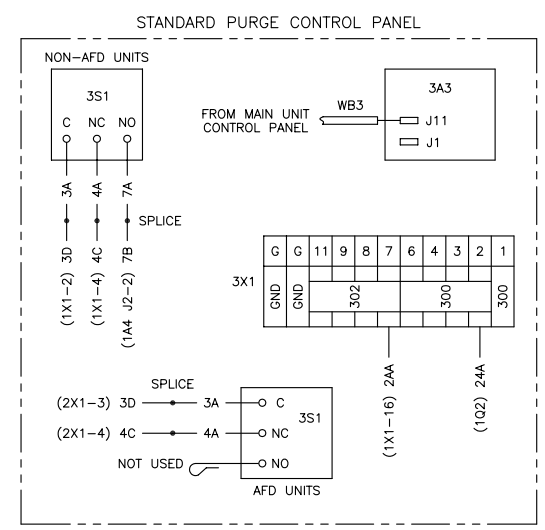


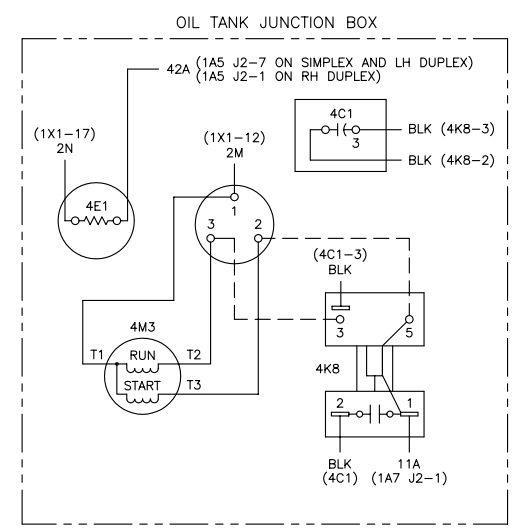


## ⚠ WARNING

HAZARDOUS VOLTAGE!

DISCONNECT ALL ELECTRIC POWER INCLUDING REMOTE DISCONNECTS AND FOLLOW LOCK OUT AND TAG PROCEDURES BEFORE SERVICING. INSURE THAT ALL MOTOR CAPACITORS HAVE DISCHARGED STORED VOLTAGE. UNITS WITH VARIABLE SPEED DRIVE, REFER TO DRIVE INSTRUCTIONS FOR CAPACITOR DISCHARGE.

FAILURE TO DO THE ABOVE BEFORE SERVICING COULD RESULT IN DEATH OR SERIOUS INJURY.

## ⚠ AVERTISSEMENT

TENSION DANGEREUSE!

COUPER TOUTES LES TENSIONS ET OUVRIR LES SECTIONNEURS À DISTANCE, PUIS SUIVRE LES PROCÉDURES DE VERROUILLAGE ET DES ÉTIQUETTES AVANT TOUTE INTERVENTION. VÉRIFIER QUE TOUS LES CONDENSATEURS DES MOTEURS SONT DÉCHARGÉS. DANS LE CAS D'UNITÉS COMPORTANT DES ENTRAÎNEMENTS À VITESSE VARIABLE, SE REPORTER AUX INSTRUCTIONS DE L'ENTRAÎNEMENT POUR DÉCHARGER LES CONDENSATEURS.

NE PAS RESPECTER CES MESURES DE PRÉCAUTION PEUT ENTRAÎNER DES BLESSURES GRAVES POUVANT ÊTRE MORTELLES.

## ⚠ ADVERTENCIA

¡VOLTAJE PELIGROSO!

DESCONECTE TODA LA ENERGÍA ELÉCTRICA, INCLUSO LAS DESCONEXIONES REMOTAS Y SIGA LOS PROCEDIMIENTOS DE CIERRE Y ETIQUETADO ANTES DE PROCEDER AL SERVICIO. ASEGÚRESE DE QUE TODOS LOS CAPACITORES DEL MOTOR HAYAN DESCARGADO EL VOLTAJE ALMACENADO. PARA LAS UNIDADES CON EJE DE DIRECCIÓN DE VELOCIDAD VARIABLE, CONSULTE LAS INSTRUCCIONES PARA LA DESCARGA DEL CONDENSADOR.

EL NO REALIZAR LO ANTERIORMENTE INDICADO, PODRÍA OCASIONAR LA MUERTE O SERIAS LESIONES PERSONALES.

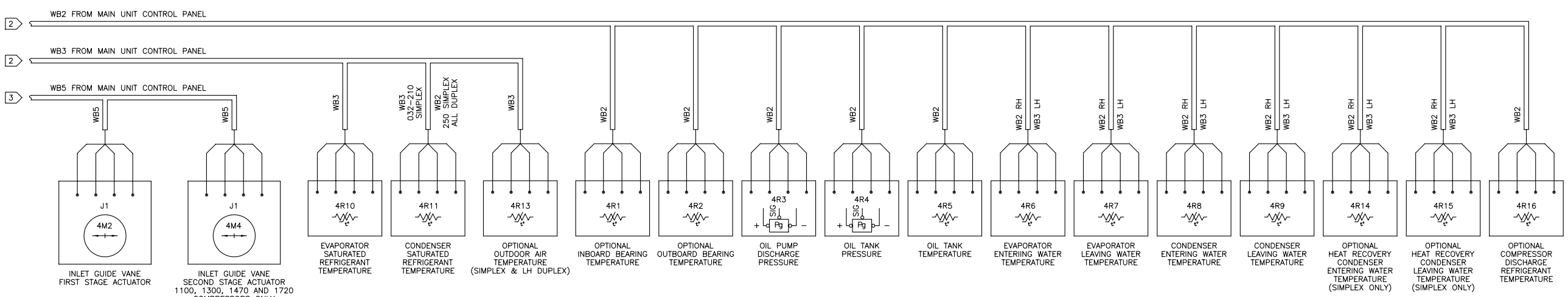


## CAUTION

USE COPPER CONDUCTORS ONLY!

UNIT TERMINALS ARE NOT DESIGNED TO ACCEPT OTHER TYPES OF CONDUCTORS.

FAILURE TO DO SO MAY CAUSE DAMAGE TO THE EQUIPMENT.

## ATTENTION

N'UTILISER QUE DES CONDUCTEURS EN CUIVRE!

LES BORNES DE L'UNITÉ NE SONT PAS CONÇUES POUR RECEVOIR D'AUTRES TYPES DE CONDUCTEURS.

L'UTILISATION DE TOUT AUTRE CONDUCTEUR PEUT ENDOMMAGER L'ÉQUIPEMENT.

## PRECAUCIÓN

¡UTILICE ÚNICAMENTE CONDUCTORES DE COBRE!

LAS TERMINALES DE LA UNIDAD NO ESTÁN DISEÑADAS PARA ACEPTAR OTROS TIPOS DE CONDUCTORES.

SI NO LO HACE, PUEDE OCASIONAR DAÑO AL EQUIPO.