TRANE	Unitrane	D	2309-4327	1/1
		Date: 26-05-03	REV. /	
		CAO	Std	

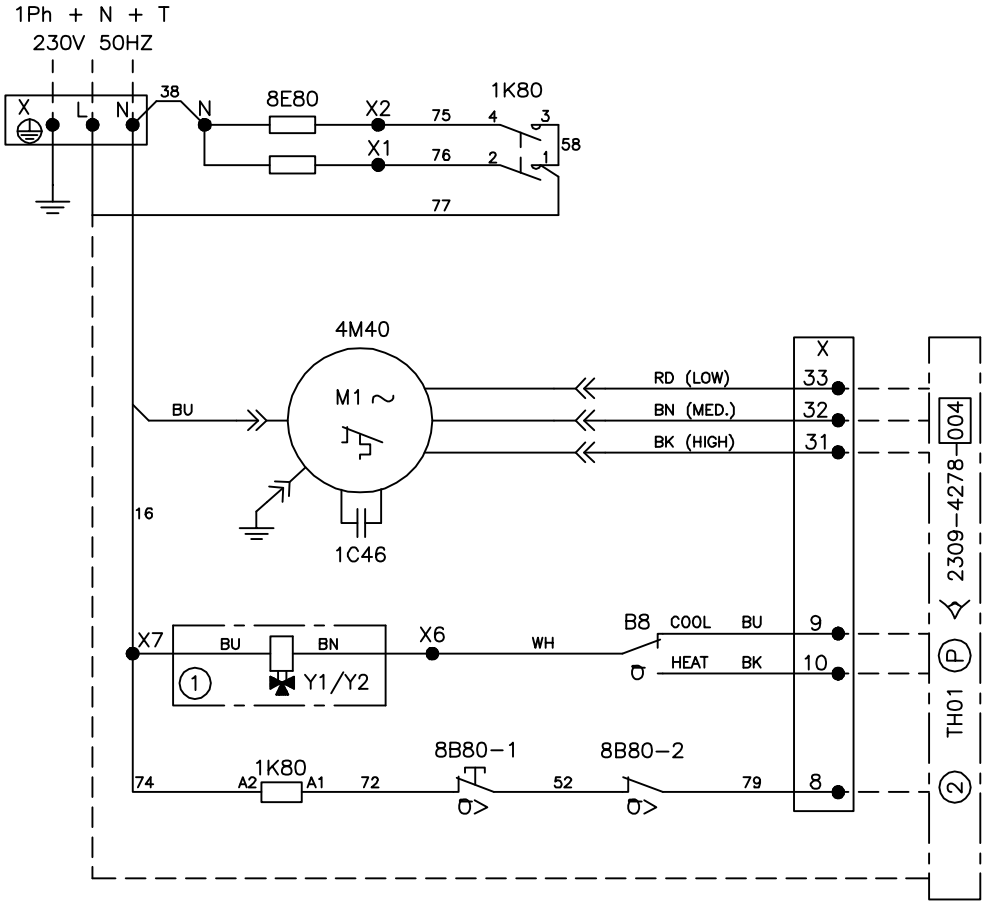

CODICE COLORE KLEURCODERING CODIGO COLORES		
BK: NERO	ZWART	NEGRO
BN: MARRONE	BRUIN	MARRON
BU: BLU	BLAUW	AZUL
GY: GRIGIO	GRIJS	GRIS
RD: ROSSO	ROOD	ROJO
WH: BIANCO	WIT	BLANCO
GN: VERDE	GROEN	VERDE
OG: ARANCIONE	ORANJE	NARANJA
YE: GIALLO	GEEL	AMARILLO
VT: VIOLA	PAARS	VIOLETA

CODE COULEUR FARBMARKIERUNG COLOUR CODE		
BK: NOIR	SCHWARZ	BLACK
BN: BRUN	BRAUN	BROWN
BU: BLEU	BLAU	BLUE
GY: GRIS	GRAU	GRAY
RD: ROUGE	ROT	RED
WH: BLANC	WEISS	WHITE
GN: VERT	GRUEN	GREEN
OG: ORANGE	ORANGE	ORANGE
YE: JAUNE	GELB	YELLOW
VT: VIOLET	VIOLETT	PURPLE

ITEM	FRANCAIS	DEUTSCH	ENGLISH
X...	BORNIER UNITE	HAUPTKLEMMLEISTE	UNIT TERMINAL BLOCK
4M40	MOTEUR VENTILATEUR	MOTOR, VENTILATOR	FAN MOTOR
1C46	CONDENSATEUR VENTILATEUR	KONDENSATOR, INNENVENTILATOR	FAN MOTOR CAPACITOR
1K80	CONTACTEUR BATTERIE ELECTRIQUE	SCHUETZ, ELECTROHEIZUNG	HEATING COIL CONTACTOR
8B80	CONTROLE TEMP. BATTERIE ELECTR.	TEMPERATURSCHALTER, ELECTROHEIZUNG	ELEC HEAT HIGH LIMIT PROTECT
8E80	BATTERIE ELECTRIQUE	ELEKTROHEIZREGISTRER	ELECTRIC HEATER
B8	SONDE CHANGE-OVER AUTOMATIQUE	AUTOMAT. UMSCHALTUNG FUEHLER	AUTOMATIC CHANGE-OVER SENSOR

REPERE	OPTIONS / ACCESSOIRES	ZUBEHÖR	OPTIONS / ACCESSORIES
① (Y1)	VANNE D'EAU FROIDE	KALTWASSER VENTIL	COOLING VALVE
① (Y2)	VANNE D'EAU CHAUDE	WARMWASSER VENTIL	HEATING VALVE
② TH01	THERMOSTAT MURAL	RAUM-THERMOSTATSET	WALL THERMOSTAT

———	CABLAGE USINE	VERDRAHTEN IN DER FABRIK	WIRING IN FACTORY
— — —	CABLAGE CLIENT	VERDRAHTUNG DURCH KUNDEN	CUSTOMER WIRING

ITEM	ITALIANO	NEDERLANDS	ESPANOL
X...	TERMINALI UNITÀ	UNIT ANNSLUITKLEMMEN BLOCK	TERMINAL UNIDAD
4M40	MOTOR VENTILATORE	VENTILATORMOTOR	MOTOR VENTILADOR
1C46	CONDENSATORE VENTILATORE	CONDENSATOR VENTILATORMOTOR	CONDENSADOR VENTILADOR
1K80	CONTATTORE BATTERIA ELEKTRICA	SCHAKELCONTACT VERWARMINGSBATTERIJ	CONTACTOR BATERIA ELECTRICA
8B80	REGOLAZIONE TEMP. BATT.ELET.	OVERVERHITTINGSBEVEIL.ELEKT.VERWARMING	CONTROL TEMP. BATERIA ELECTRICA
8E80	BATTERIA ELETRICA	ELECTRISCHE VERWARMING	BATERIA ELECTRICA
B8	SONDA DEL SISTEMA DI INVERS. DI CICLI	SENSOR AUTOMATISCHE OMSCHAKELING	SENSOR DE CAMBIO AUTOMATICO

REPERE	OPZIONI / ACCESSORI	OPTIES / ACCESSOIRES	OPCIONES / ACCESSORIOS
① (Y1)	VALVOLA ACQUA RAFFREDDAMENTO	KOELKLEP	VALVULA DE AGUA FRIO
① (Y2)	VALVOLA ACQUA RISCALDAMENTO	VERWARMINGSKLEP	VALVULA DE AGUA CALOR
② TH01	TERMOSTATO MURAL COMPLETO	WANDTHERMOSTAAT COMPLEET	TERMOSTATO MURAL COMPLETO

———	CABLAGGIO NELLA FABBRICA	BEDRADING TER FACTORIY	CABLEADO EN FÁBRICA
— — —	CABLAGGIO CLIENT	BEDRADING DOOR KLANT TE VERZORGEN	CABLEADO DEL CLIENT