TRANE	Unitrane	D 2309–4257	1/1
		Date: 15–05–03	REV. A
		CAO	Std

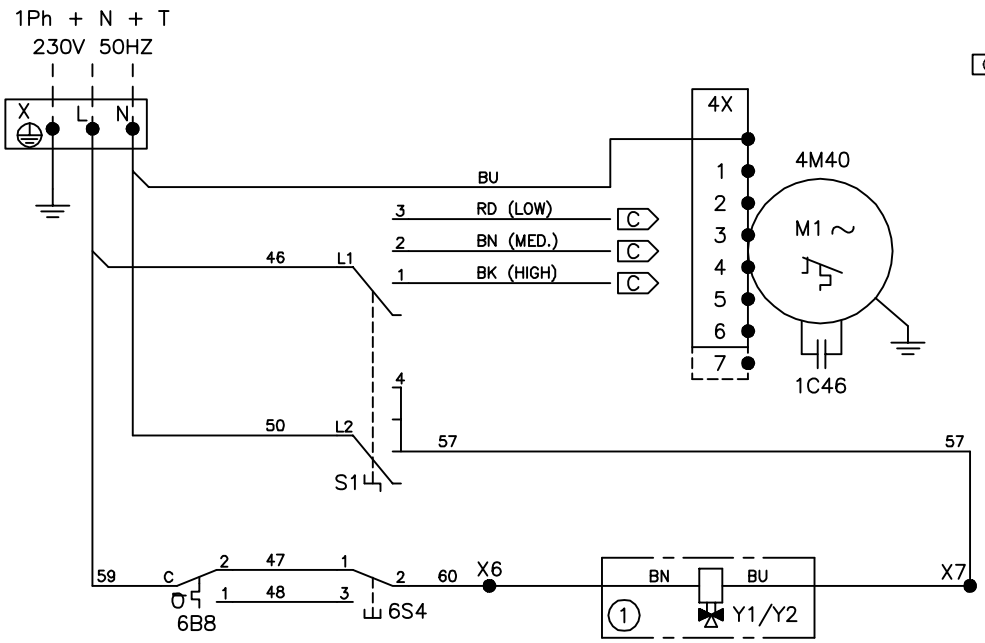

–CÂBLAGE UNITE STANDARD
–STANDARD MASCHINE VERDRAHTUNG
–UNIT STANDARD WIRING
–UNITA STANDARD CABLAGGIO
–STANDAARD BEDRADING UNIT
–CABLEADO UNIDAD STANDARD

	4X1	4X2	4X3	4X4	4X5	4X6	4X7
	STD						
#01		BK	BN		RD		
#02			BK		BN	RD	
#03		BK		BN		RD	
#04				BK		BN	RD
#06			BK		BN		RD
#08			BK		BN		RD
	HESP						
#01	BK	BN		RD			
#02	BK		BN		RD		
#03	BK		BN		RD		
#04		BK		BN		RD	
#06		BK		BN		RD	
#08	BK		BN			RD	

CODE COULEUR FARBMARKIERUNG COLOUR CODE		
BK: NOIR	SCHWARZ	BLACK
BN: BRUN	BRAUN	BROWN
BU: BLEU	BLAU	BLUE
RD: ROUGE	ROT	RED
WH: BLANC	WEISS	WHITE

CODICE COLORE KLEURCODERING CODIGO COLORES		
BK: NERO	ZWART	NEGRO
BN: MARRONE	BRUIN	MARRON
BU: BLU	BLAUW	AZUL
RD: ROSSO	ROOD	ROJO
WH: BIANCO	WIT	BLANCO

ITEM	FRANCAIS	DEUTSCH	ENGLISH
4X...	BORNIER MOTEUR	VERDICHTERMOTOR–KLEMMLEISTE	MOTEUR TERMINAL BLOCK
X...	BORNIER UNITE	HAUPTKLEMMLEISTE	UNIT TERMINAL BLOCK
4M40	MOTEUR VENTILATEUR	MOTOR, VENTILATOR	FAN MOTOR
1C46	CONDENSATEUR VENTILATEUR	KONDENSATOR, INNENVENTILATOR	FAN MOTOR CAPACITOR
S1	COMMUTATEUR DE VITESSE VENTILATEUR	VENTILATORSCHALTER	FAN MOTOR SPEED SWITCH
6S4	COMMUTATEUR ETE/HIVER	SOMMER/WINTER SCHALTER	SUMMER/WINTER SELECTOR
6B8	THERMOSTAT DE REGULATION	THERMOSTAT, REGELUNG	CONTROL THERMOSTAT

REPERE	OPTIONS	ZUBEHOER	OPTIONS
① (Y1)	VANNE D'EAU FROIDE	KALTWASSER VENTIL	COOLING VALVE
① (Y2)	VANNE D'EAU CHAUDE	WARMWASSER VENTIL	HEATING VALVE

———	CABLAGE USINE	VERDRAHTEN IN DER FABRIK	WIRING IN FACTORY
— — —	CABLAGE CLIENT	VERDRAHTUNG DURCH KUNDEN	CUSTOMER WIRING

ITEM	ITALIANO	NEDERLANDS	ESPANOL
4X...	TERMINALI MOTORE	MOTOR AANSLUITKLEMMEN BLOK	TERMINAL MOTOR
X...	TERMINALI UNITÀ	UNIT ANNSLUITKLEMMEN BLOCK	TERMINAL UNIDAD
4M40	MOTOR VENTILATORE	VENTILATORMOTOR	MOTOR VENTILADOR
1C46	CONDENSATORE VENTILATORE	CONDENSATOR VENTILATORMOTOR	CONDENSADOR VENTILADOR
S1	COMMUTATORE DI VELOCITAD VENTIL.	TOERENTALSCHAKELAAR VENTILATORMOTOR	COMMUTADOR DE VELOCIDAD VENTIL.
6S4	COMMUTATOTE ESTATE/INVERNO	KEUZESCHAKELAAR ZOMER/WINTER	CONMUTADOR VERANO/INVIERNO
6B8	TERMOSTATO DI REGOLATZIONE	THERMOSTAAT REGELING	TERMOSTATO DE CONTROL

REPERE	OPZIONI	OPTIES	OPCIONES
① (Y1)	VALVOLA ACQUA RAFFREDDAMENTO	KOELKLEP	VALVULA DE AGUA FRIO
① (Y2)	VALVOLA ACQUA RISCALDAMENTO	VERWARMINGSKLEP	VALVULA DE AGUA CALOR

———	CABLAGGIO NELLA FABBRICA	BEDRADING TER FACTORIY	CABLEADO EN FÁBRICA
— — —	CABLAGGIO CLIENT	BEDRADING DOOR KLANT TE VERZORGEN	CABLEADO DEL CLIENT