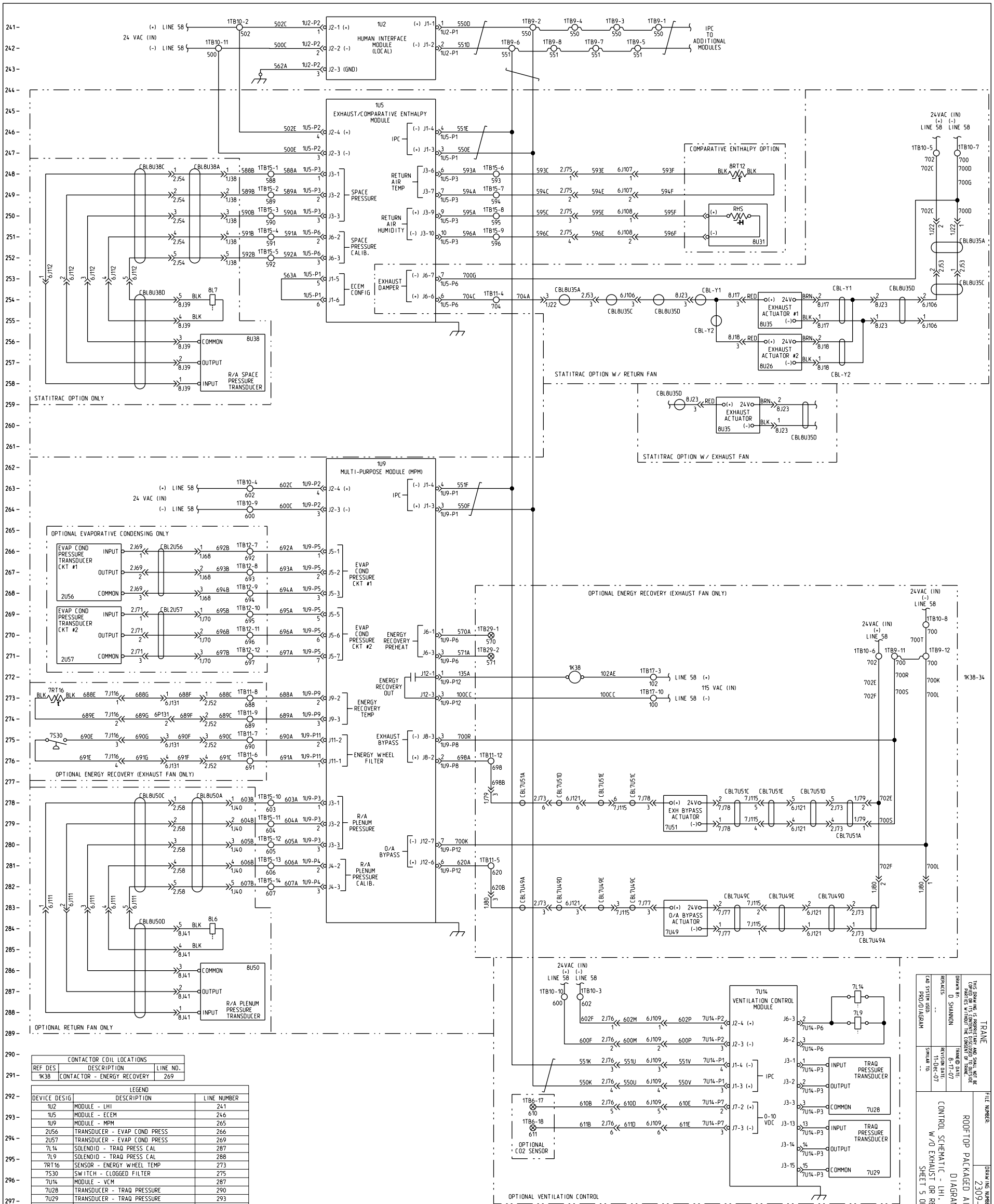

CONTACTOR COIL LOCATIONS		
REF DES	DESCRIPTION	LINE NO.
1K38	CONTACTOR - ENERGY RECOVERY	269

LEGEND		
DEVICE DESIG	DESCRIPTION	LINE NUMBER
1U2	MODULE - LHI	241
1U5	MODULE - ECEM	246
1U9	MODULE - MPM	265
2U56	TRANSDUCER - EVAP COND PRESS	266
2U57	TRANSDUCER - EVAP COND PRESS	269
7L14	SOLENOID - TRAQ PRESS CAL	287
7L9	SOLENOID - TRAQ PRESS CAL	288
7RT16	SENSOR - ENERGY WHEEL TEMP	273
7S30	SWITCH - CLOGGED FILTER	275
7U14	MODULE - VCM	287
7U28	TRANSDUCER - TRAQ PRESSURE	290
7U29	TRANSDUCER - TRAQ PRESSURE	293
7U49	ACTUATOR - EXHAUST BYPASS	283
7U51	ACTUATOR - O/A BYPASS	278
8L6	SOLENOID - R/A PLENNUM PRESS CALIB	284
8L7	SOLENOID - SPACE PRESS CAL	254
8RT12	SENSOR - RETURN AIR TEMP	248
8U26	ACTUATOR - EXHAUST DAMPER #2	256
8U31	SENSOR - R/A HUMIDITY	250
8U35	ACTUATOR - EXHAUST DAMPER #1	254,259
8U38	TRANSDUCER - R/A SPACE PRESSURE	258
8U50	TRANSDUCER - R/A PLENNUM PRESSURE	288

CAUTION

USE COPPER CONDUCTORS ONLY!

UNIT TERMINALS ARE NOT DESIGNED TO ACCEPT OTHER TYPES OF CONDUCTORS.

FAILURE TO DO SO MAY CAUSE DAMAGE TO THE EQUIPMENT.

PRECAUCIÓN

N'UTILISER QUE DES CONDUCTEURS EN CUIVRE!

LES BORNES DE L'UNITÉ NE SONT PAS CONÇUES POUR RECEVOIR D'AUTRES TYPES DE CONDUCTEURS.

L'UTILISATION DE TOUT AUTRE CONDUCTEUR PEUT ENDOMMAGER L'ÉQUIPEMENT.

ATTENTION

¡UTILICE ÚNICAMENTE CONDUCTORES DE COBRE!

LAS TERMINALES DE LA UNIDAD NO ESTÁN DISEÑADAS PARA ACEPTAR OTROS TIPOS DE CONDUCTORES.

SI NO LO HACE, PUEDE OCASIONAR DAÑO AL EQUIPO.

TRANE
THIS DRAWING IS PROPRIETARY AND SHALL NOT BE COPIED OR ITS CONTENTS DISCLOSED TO OUTSIDE PARTIES WITHOUT THE CONSENT OF TRANE.

DRAWN BY: D SHANNON
REPLACES: --
CAD SYSTEM USED: PRO/DIAGRAM
TRANE® DATE: 8-17-07
REVISION DATE: 11-Dec-07
SIMILAR TO: --

FILE NUMBER:

ROOFTOP PACKAGED AIR CONDITIONER
DIAGRAM
CONTROL SCHEMATIC - LHI, ECEM, MPM, VCM 3PC
W/O EXHAUST OR RETURN V.F.D.
SHEET 5 OF 7

DRAWING NUMBER: 2309-3772
SHEET: 1 of 1
REV: B