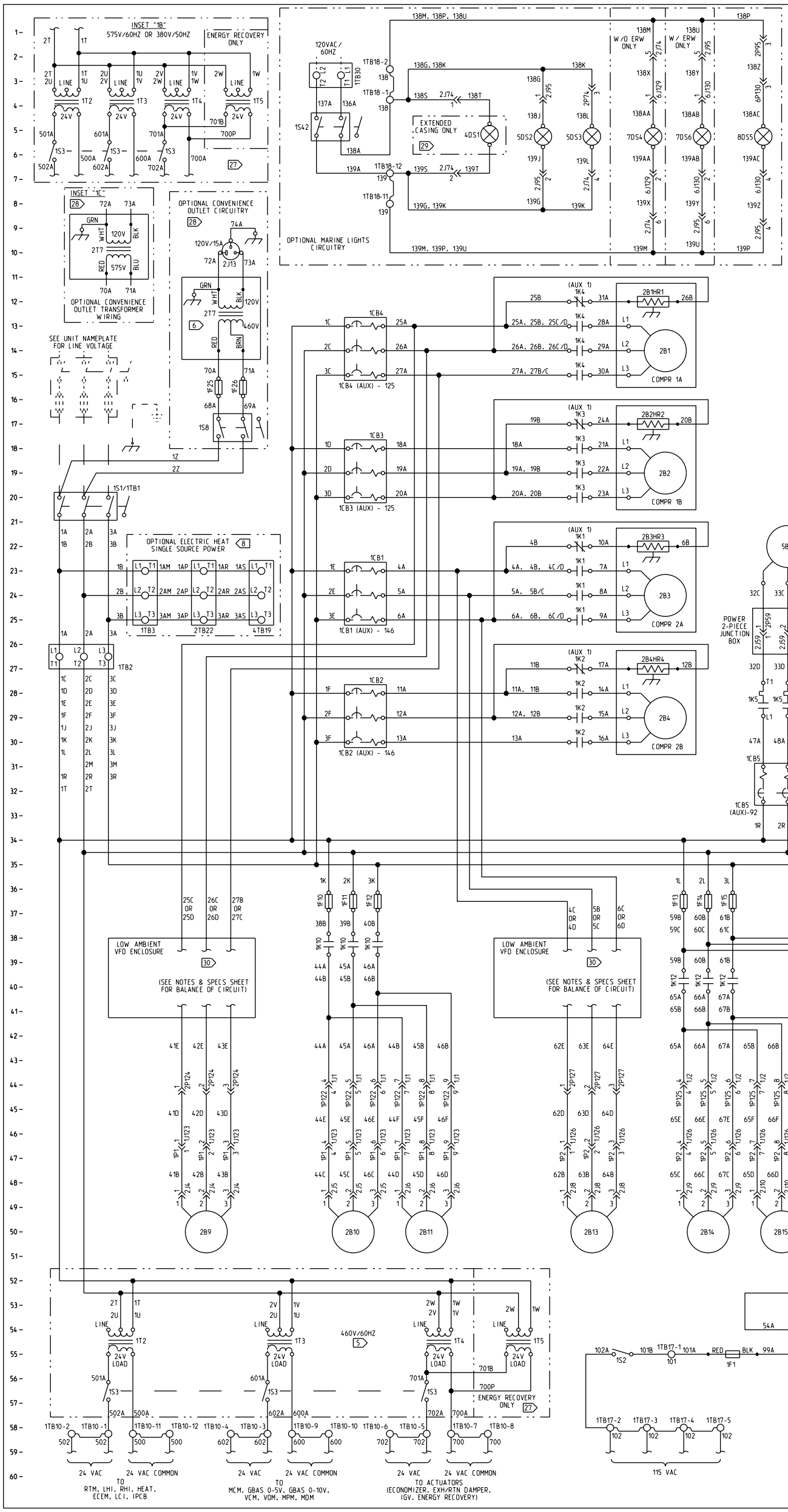

CAUTION

USE COPPER CONDUCTORS ONLY!

UNIT TERMINALS ARE NOT DESIGNED TO ACCEPT OTHER TYPES OF CONDUCTORS.

FAILURE TO DO SO MAY CAUSE DAMAGE TO THE EQUIPMENT.

ATTENTION

N'UTILISER QUE DES CONDUCTEURS EN CUIVRE!

LES BORNES DE L'UNITÉ NE SONT PAS CONÇUES POUR RECEVOIR D'AUTRES TYPES DE CONDUCTEURS.

L'UTILISATION DE TOUT AUTRE CONDUCTEUR PEUT ENDOMMAGER L'ÉQUIPEMENT.

PRECAUCIÓN

¡UTILICE ÚNICAMENTE CONDUCTORES DE COBRE!

LAS TERMINALES DE LA UNIDAD NO ESTÁN DISEÑADAS PARA ACEPTAR OTROS TIPOS DE CONDUCTORES.

SI NO LO HACE, PUEDE OCASIONAR DAÑO AL EQUIPO.

LEGEND

DEVICE DESIG	DESCRIPTION	LINE NUMBER
1CB1	CIRCUIT BREAKER - COMPRESSOR	24
1CB2	CIRCUIT BREAKER - COMPRESSOR	29
1CB3	CIRCUIT BREAKER - COMPRESSOR	19
1CB4	CIRCUIT BREAKER - COMPRESSOR	14
1CB5	CIRCUIT BREAKER - SUPPLY FAN	31
1F1	FUSE - CONTROL CIRCUIT	55
1F10	FUSE - CONDENSER FAN	36
1F11	FUSE - CONDENSER FAN	36
1F12	FUSE - CONDENSER FAN	36
1F13	FUSE - CONDENSER FAN	36
1F14	FUSE - CONDENSER FAN	36
1F15	FUSE - CONDENSER FAN	36
1F22	FUSE - EXH/RTN FAN V.F.D.	31
1F23	FUSE - EXH/RTN FAN V.F.D.	31
1F24	FUSE - EXH/RTN FAN V.F.D.	31
1F25	FUSE - CONVENIENCE OUTLET	15
1F26	FUSE - CONVENIENCE OUTLET	15
1F3	FUSE - TRANSFORMER CIRCUIT	36
1F4	FUSE - TRANSFORMER CIRCUIT	36
1S1/1TB1	MANUAL DISCONNECT/TERM BLOCK	20
1S2	SWITCH - CONTROL CIRCUIT	55
1S3	SWITCH - 24V TRANSFORMER	56
1S42	SWITCH - MARINE LIGHTS	4
1S8	SWITCH - CONV. OUTLET	17
1T1	TRANSFORMER - CONTROL POWER	54
1T2	TRANSFORMER - 24 VAC	54
1T3	TRANSFORMER - 24 VAC	54
1T4	TRANSFORMER - 24 VAC	54
1T5	TRANSFORMER - 24 VAC	54
1TB2	TERM BLOCK - DISTRIBUTION	26
1TB3	TERM BLOCK - ELEC HEAT DIST	23
1TB30	TERM BLOCK - MARINE LIGHTS	3
2B1	COMPRESSOR	14
2B10	MOTOR - COND FAN	50
2B11	MOTOR - COND FAN	50
2B13	MOTOR - COND FAN	50
2B14	MOTOR - COND FAN	50
2B15	MOTOR - COND FAN	50
2B1HR1	HEATER - CRANKCASE	12
2B2	COMPRESSOR	19
2B2HR2	HEATER - CRANKCASE	17
2B3	COMPRESSOR	24
2B3HR3	HEATER - CRANKCASE	22
2B4	COMPRESSOR	29
2B4HR4	HEATER - CRANKCASE	27
2B9	MOTOR - COND FAN	50
2T7	TRANSFORMER - CONV. OUTLET	13
2TB22	TERM BLOCK - EL HEAT 2-PC PWR	23
4DS1	LAMP - MARINE LIGHT	5
4TB19	TERM BLOCK - ELEC HEAT POWER	23
5B7	MOTOR - SUPPLY FAN	23
5DS2	LAMP-MARINE LIGHT	5
5DS3	LAMP - MARINE LIGHT	5
7B17	MOTOR - ENERGY WHEEL	47
7DS4	LAMP - MARINE LIGHT	5
7DS6	LAMP - MARINE LIGHT	5
8B8	MOTOR - EXHAUST/RTN FAN	20
8DS5	LAMP - MARINE LIGHT	5
8U17	V.F.D. - EXH/RTN FAN	22

TRANE
A DIVISION OF AMERICAN STANDARD INC.
COPYRIGHT © 2004 ALL RIGHTS RESERVED
THIS DRAWING IS PROPRIETARY AND SHALL NOT BE COPIED OR ITS CONTENTS DISCLOSED TO OUTSIDE PARTIES WITHOUT THE CONSENT OF TRANE.

DRAWN BY: B. WALDEN | DATE: 9-13-07
REPLACES: -- | REVISION DATE: --
CAD SYSTEM USED: PRO/DIAGRAM | SIMILAR TO: --

FILE NUMBER:

ROOFTOP PACKAGED AIR CONDITIONER DIAGRAM

POWER SCHEMATIC - 901-105T 3-PIECE W/ EXH/RTN FAN VFD AND LOW AMBIENT
SHEET 1 OF 7

DRAWING NUMBER: 2309-3746
SHEET: 1 OF 1
REV: A