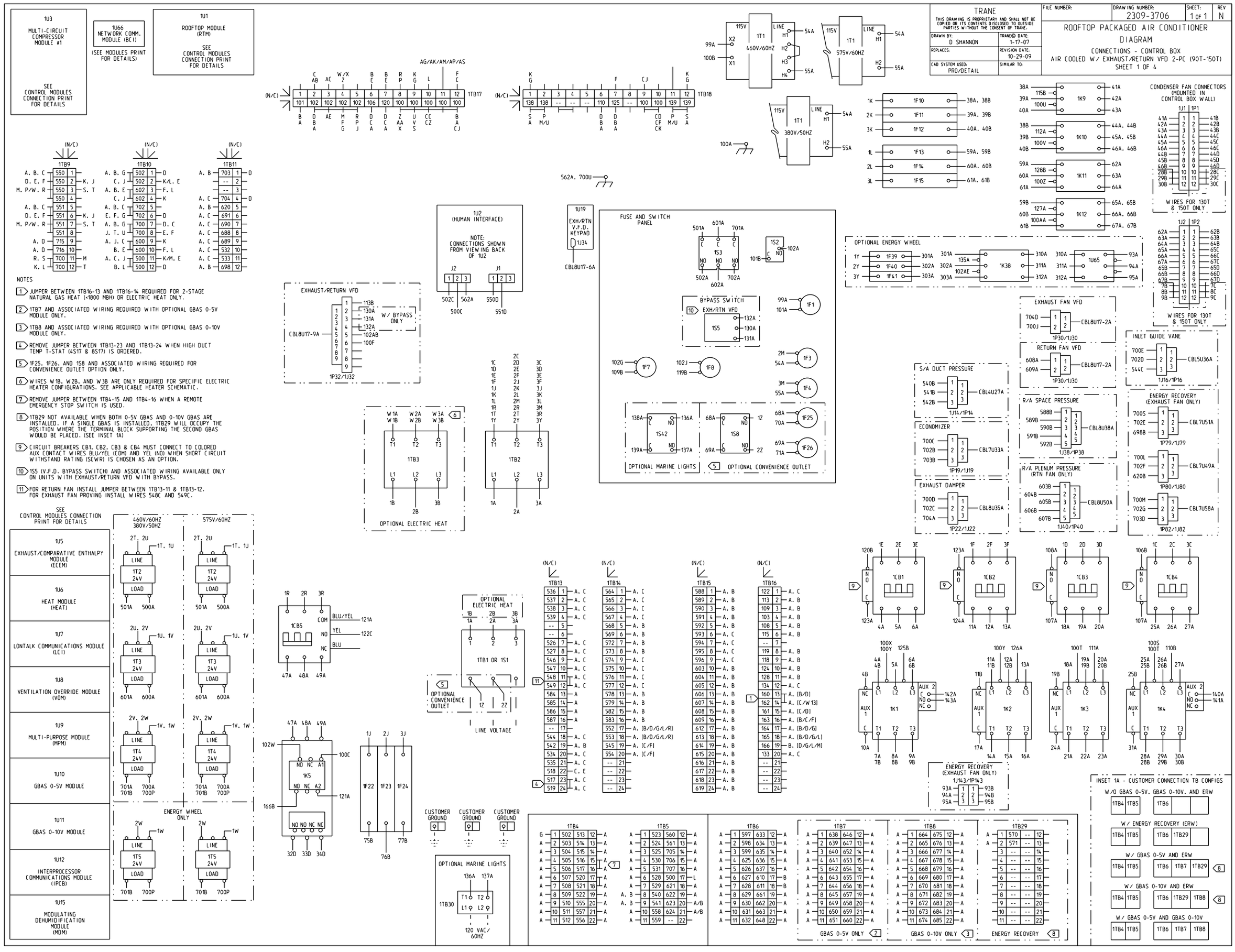
TRANE
THIS DRAWING IS PROPRIETARY AND SHALL NOT BE COPIED OR ITS CONTENTS DISCLOSED TO OUTSIDE PARTIES WITHOUT THE CONSENT OF TRANE.
DRAWN BY: D SHANNON
TRANE® DATE: 1-17-07
REPLACES:
REVISION DATE: 10-29-09
CAD SYSTEM USED: PRO/DETAIL
SIMILAR TO:
FILE NUMBER:
DRAWING NUMBER: 2309-3706
SHEET: 1 OF 1
REV N
ROOFTOP PACKAGED AIR CONDITIONER DIAGRAM
CONNECTIONS - CONTROL BOX
AIR COOLED W/ EXHAUST/RETURN VFD 2-PC (90T-150T)
SHEET 1 OF 4
1U3 MULTI-CIRCUIT COMPRESSOR MODULE #1
SEE CONTROL MODULES CONNECTION PRINT FOR DETAILS
1U66 NETWORK COMM. MODULE (BCI)
(SEE MODULES PRINT FOR DETAILS)
1U1 ROOFTOP MODULE (RTM)
SEE CONTROL MODULES CONNECTION PRINT FOR DETAILS
AG/AK/AM/AP/AS
1TB17
1TB18
1T1 460V/60HZ
1T1 575V/60HZ
1T1 380V/50HZ
1F10 1F11 1F12 1F13 1F14 1F15
1K9 1K10 1K11 1K12
CONDENSER FAN CONNECTORS (MOUNTED IN CONTROL BOX WALL)
1J1 1P1
WIRES FOR 130T & 150T ONLY
1J2 1P2
WIRES FOR 130T & 150T ONLY
1TB9 1TB10 1TB11
NOTES
1 JUMPER BETWEEN 1TB16-13 AND 1TB16-14 REQUIRED FOR 2-STAGE NATURAL GAS HEAT (<1800 MBH) OR ELECTRIC HEAT ONLY.
2 1TB7 AND ASSOCIATED WIRING REQUIRED WITH OPTIONAL GBAS 0-5V MODULE ONLY.
3 1TB8 AND ASSOCIATED WIRING REQUIRED WITH OPTIONAL GBAS 0-10V MODULE ONLY.
4 REMOVE JUMPER BETWEEN 1TB13-23 AND 1TB13-24 WHEN HIGH DUCT TEMP T-STAT (4S17 & 8S17) IS ORDERED.
5 1F25, 1F26, AND 1S8 AND ASSOCIATED WIRING REQUIRED FOR CONVENIENCE OUTLET OPTION ONLY.
6 WIRES W1B, W2B, AND W3B ARE ONLY REQUIRED FOR SPECIFIC ELECTRIC HEATER CONFIGURATIONS. SEE APPLICABLE HEATER SCHEMATIC.
7 REMOVE JUMPER BETWEEN 1TB4-15 AND 1TB4-16 WHEN A REMOTE EMERGENCY STOP SWITCH IS USED.
8 1TB29 NOT AVAILABLE WHEN BOTH 0-5V GBAS AND 0-10V GBAS ARE INSTALLED. IF A SINGLE GBAS IS INSTALLED, 1TB29 WILL OCCUPY THE POSITION WHERE THE TERMINAL BLOCK SUPPORTING THE SECOND GBAS WOULD BE PLACED. (SEE INSET 1A)
9 CIRCUIT BREAKERS CB1, CB2, CB3 & CB4 MUST CONNECT TO COLORED AUX CONTACT WIRES BLU/YEL (COM) AND YEL (NO) WHEN SHORT CIRCUIT WITHSTAND RATING (SCWR) IS CHOSEN AS AN OPTION.
10 1S5 (V.F.D. BYPASS SWITCH) AND ASSOCIATED WIRING AVAILABLE ONLY ON UNITS WITH EXHAUST/RETURN VFD WITH BYPASS.
11 FOR RETURN FAN INSTALL JUMPER BETWEEN 1TB13-11 & 1TB13-12. FOR EXHAUST FAN PROVING INSTALL WIRES 548C AND 549C.
SEE CONTROL MODULES CONNECTION PRINT FOR DETAILS
1U5 EXHAUST/COMPARATIVE ENTHALPY MODULE (ECEM)
1U6 HEAT MODULE (HEAT)
1U7 LONTALK COMMUNICATIONS MODULE (LCI)
1U8 VENTILATION OVERRIDE MODULE (VOM)
1U9 MULTI-PURPOSE MODULE (MPM)
1U10 GBAS 0-5V MODULE
1U11 GBAS 0-10V MODULE
1U12 INTERPROCESSOR COMMUNICATIONS MODULE (IPCB)
1U15 MODULATING DEHUMIDIFICATION MODULE (MDM)
460V/60HZ 380V/50HZ
575V/60HZ
ENERGY WHEEL ONLY
1U2 (HUMAN INTERFACE)
NOTE: CONNECTIONS SHOWN FROM VIEWING BACK OF 1U2
1U19 EXH/RTN V.F.D. KEYPAD
CBL8U17-6A
EXHAUST/RETURN VFD
CBL8U17-9A
W/ BYPASS ONLY
1P32/1J32
FUSE AND SWITCH PANEL
BYPASS SWITCH
EXH/RTN VFD
OPTIONAL MARINE LIGHTS
OPTIONAL CONVENIENCE OUTLET
OPTIONAL ENERGY WHEEL
EXHAUST FAN VFD
RETURN FAN VFD
CBL8U17-2A
1P30/1J30
INLET GUIDE VANE
CBL5U36A
1J16/1P16
S/A DUCT PRESSURE
CBL4U27A
1J14/1P14
ECONOMIZER
CBL7U33A
1P19/1J19
EXHAUST DAMPER
CBL8U35A
1P22/1J22
R/A SPACE PRESSURE
CBL8U38A
1J38/1P38
R/A PLENUM PRESSURE (RTN FAN ONLY)
CBL8U50A
1J40/1P40
ENERGY RECOVERY (EXHAUST FAN ONLY)
CBL7U51A
1P79/1J79
CBL7U49A
1P80/1J80
CBL7U58A
1P82/1J82
OPTIONAL ELECTRIC HEAT
1TB3
1TB2
1CB5
1TB1 OR 1S1
LINE VOLTAGE
1CB1 1CB2 1CB3 1CB4
1K1 1K2 1K3 1K4
ENERGY RECOVERY (EXHAUST FAN ONLY)
1J143/1P143
CUSTOMER GROUND
OPTIONAL MARINE LIGHTS
1TB30
120 VAC/ 60HZ
1TB13 1TB14 1TB15 1TB16
1TB4 1TB5 1TB6 1TB7 1TB8 1TB29
GBAS 0-5V ONLY
GBAS 0-10V ONLY
ENERGY RECOVERY
INSET 1A - CUSTOMER CONNECTION TB CONFIGS
W/O GBAS 0-5V, GBAS 0-10V, AND ERW
W/ ENERGY RECOVERY (ERW)
W/ GBAS 0-5V AND ERW
W/ GBAS 0-10V AND ERW
W/ GBAS 0-5V AND GBAS 0-10V