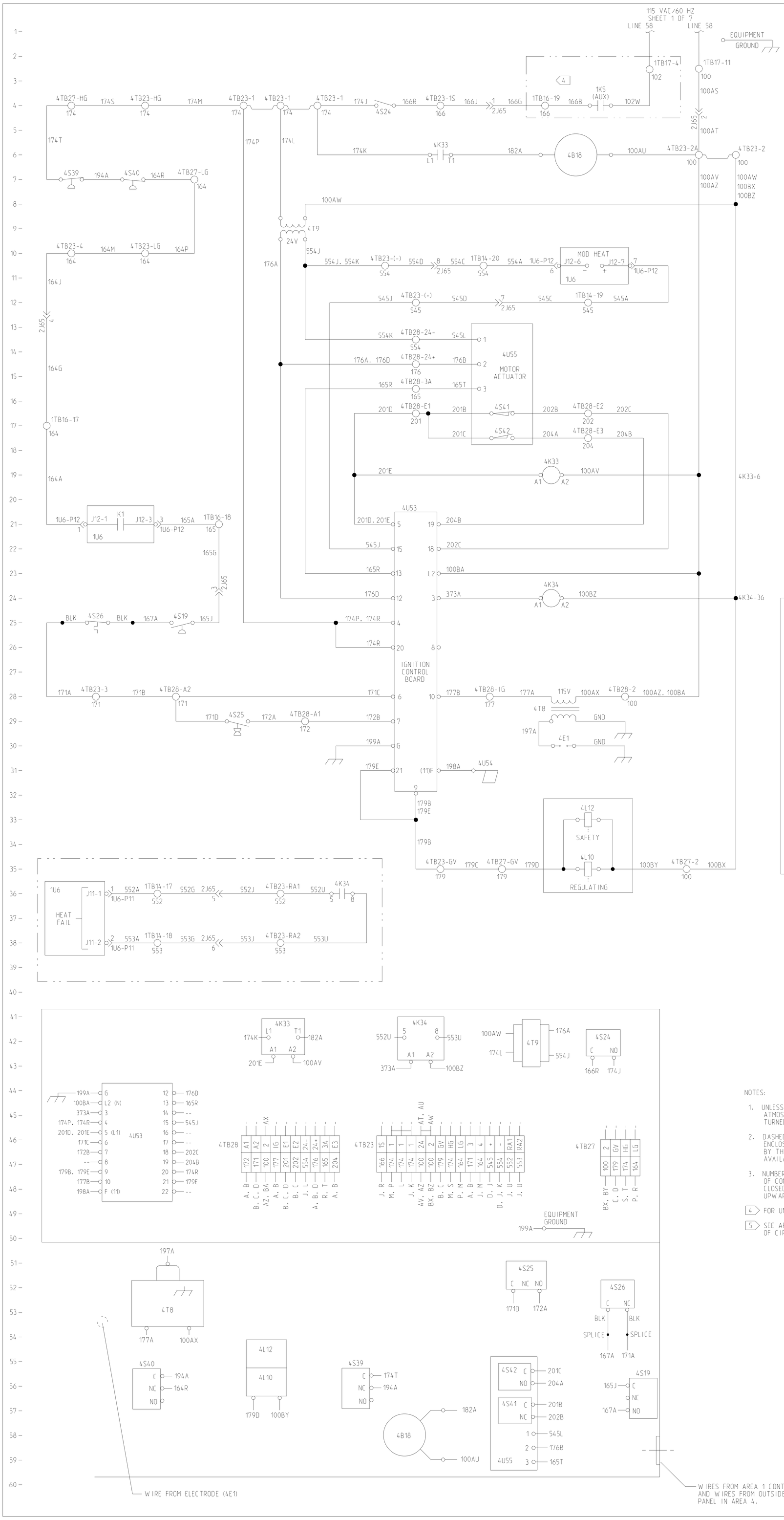

DEVICE PREFIX LOCATION CODE	
AREA	LOCATION
1	INSIDE UNIT CONTROL BOX
2	CONDENSER SECTION
3	INSIDE SECONDARY CONTROL BOX
4	HEAT/EXTENDED CASING SECTION
5	SUPPLY FAN SECTION
6	EVAP SECTION
7	DAMPER/FILTERS SECTION
8	EXHAUST/RETURN FAN SECTION
9	EXTERNAL FIELD MTD DEVICE

LEGEND		
DEVICE DESIG	DESCRIPTION	LINE NUMBER
1U6	MODULE - HEAT	21,36
4B18	MOTOR - COMBUSTION BLOWER	6
4E1	ELECTRODE	30
4L10	VA LVE - REGULATING	35
4L12	VALVE - SAFETY	35
4S19	SWITCH - SUPPLY AIR FLOW	25
4S24	SWITCH - CONTROL CIRCUIT	4
4S25	SWITCH - COMBUSTION AIR FLOW	29
4S26	SWITCH - HIGH LIMIT CUTOUT	25
4S39	SWITCH - HIGH GAS PRESSURE	7
4S40	SWITCH - LOW GAS PRESSURE	7
4S41	LOW FIRE START INTERLOCK	16
4S42	PURGE INTERLOCK	17
4T8	TRANSFORMER - IGNITION	28
4T9	TRANSFORMER - 24V	9
4U53	IGNITION CONTROL BOARD	26
4U54	FLAME ROD	31
4U55	ACTUATOR - MOTOR	15
5U16	SUPPLY FAN VARIABLE FREQUENCY DRIVE	36

CONTACTOR COIL LOCATIONS		
REF DES	DESCRIPTION	LINE NO.
1K5	CONTACTOR - SUPPLY FAN	4 (SHT 1 OF 7)
4K33	RELAY - COMBUSTION BLOWER	19
4K34	RELAY - HEAT FAIL	24

TERMINAL STRIP LEGEND	
REF DES	DESCRIPTION
1TB14,1TB16	CONTROLS - FACTORY
1TB17	115 VAC - FACTORY
4TB23,4TB28	TERMINAL BLOCK - HEAT
4TB27	TERMINAL BLOCK - HEAT VALVE

IMPORTANT!

DO NOT ENERGIZE UNIT UNTIL CHECK-OUT AND START-UP PROCEDURE HAS BEEN COMPLETED.

CAUTION

IF ANY OF THE EXISTING WIRING AS SUPPLIED WITH THE APPLIANCE MUST BE REPLACED. IT MUST BE REPLACED WITH WIRING RATED FOR 105 C OR ITS EQUIVALENT.

CAUTION

USE COPPER CONDUCTORS ONLY!

UNIT TERMINALS ARE NOT DESIGNED TO ACCEPT OTHER TYPES OF CONDUCTORS.

FAILURE TO DO SO MAY CAUSE DAMAGE TO THE EQUIPMENT.

ATTENTION

N'UTILISER QUE DES CONDUCTEURS EN CUIVRE!

LES BORNES DE L'UNITÉ NE SONT PAS CONÇUES POUR RECEVOIR D'AUTRES TYPES DE CONDUCTEURS.

L'UTILISATION DE TOUT AUTRE CONDUCTEUR PEUT ENDOMMAGER L'ÉQUIPEMENT.

PRECAUCIÓN

¡UTILICE ÚNICAMENTE CONDUCTORES DE COBRE!

LAS TERMINALES DE LA UNIDAD NO ESTÁN DISEÑADAS PARA ACEPTAR OTROS TIPOS DE CONDUCTORES.

SI NO LO HACE, PUEDE OCASIONAR DAÑO AL EQUIPO.

⚠ WARNING

HAZARDOUS VOLTAGE!

DISCONNECT ALL ELECTRIC POWER INCLUDING REMOTE DISCONNECTS AND FOLLOW LOCK OUT AND TAG PROCEDURES BEFORE SERVICING. INSURE THAT ALL MOTOR CAPACITORS HAVE DISCHARGED STORED VOLTAGE. UNITS WITH VARIABLE SPEED DRIVE, REFER TO DRIVE INSTRUCTIONS FOR CAPACITOR DISCHARGE.

FAILURE TO DO THE ABOVE BEFORE SERVICING COULD RESULT IN DEATH OR SERIOUS INJURY.

⚠ AVERTISSEMENT

TENSION DANGEREUSE!

COUPER TOUTES LES TENSIONS ET OUVRIR LES SECTIONNEURS À DISTANCE. PUIS SUIVRE LES PROCÉDURES DE VERROUILLAGE ET DES ÉTIQUETTES AVANT TOUTE INTERVENTION. VÉRIFIER QUE TOUS LES CONDENSATEURS DES MOTEURS SONT DÉCHARGÉS. DANS LE CAS D'UNITÉS COMPORTANT DES ENTRAÎNEMENTS À VITESSE VARAIBLE, SE REPORTER AUX INSTRUCTIONS DE L'ENTRAÎNEMENT POUR DÉCHARGER LES CONDENSATEURS.

NE PAS RESPECTER CES MESURES DE PRÉCAUTION PEUT ENTRAÎNER DES BLESSURES GRAVES POUVANT ÊTRE MORTELLES.

⚠ ADVERTENCIA

¡VOLTAJE PELIGROSO!

DESCONECTE TODA LA ENERGÍA ELÉCTRICA, INCLUSO LAS DESCONEXIONES REMOTAS Y SIGA LOS PROCEDIMIENTOS DE CIERRE Y ETIQUETADO ANTES DE PROCEDER AL SERVICIO. ASEGÚRESE DE QUE TODOS LOS CAPACITORES DEL MOTOR HAYAN DESCARGADO EL VOLTAJE ALMACENADO. PARA LAS UNIDADES CON EJE DE DIRECCIÓN DE VELOCIDAD VARIABLE, CONSULTE LAS INSTRUCCIONES PARA LA DESCARGA DEL CONDENSADOR.

EL NO REALIZAR LO ANTERIORMENTE INDICADO, PODRÍA OCASIONAR LA MUERTE O SERIAS LESIONES PERSONALES.

NOTES:

1. UNLESS OTHERWISE NOTED, ALL SWITCHES ARE SHOWN AT 25° C (77° F), AT ATMOSPHERIC PRESSURE, AT 50% RELATIVE HUMIDITY, WITH ALL UTILITIES TURNED OFF, AND AFTER A NORMAL SHUTDOWN HAS OCCURRED.
2. DASHED LINES INDICATE RECOMMENDED FIELD WIRING BY OTHERS. DASHED LINE ENCLOSURES AND/OR DASHED DEVICE OUTLINES INDICATE COMPONENTS PROVIDED BY THE FIELD. PHANTOM LINE ENCLOSURES INDICATE ALTERNATE CIRCUITRY OR AVAILABLE SALES OPTIONS. SOLID LINE INDICATES WIRING BY TRANE CO.
3. NUMBERS ALONG THE RIGHT SIDE OF THE SCHEMATIC DESIGNATE THE LOCATION OF CONTACTS BY LINE NUMBER. AN UNDERLINED NUMBER INDICATES A NORMALLY CLOSED CONTACT. AN OPEN ARROWHEAD BELOW THE LINE NUMBER POINTING UPWARD INDICATES A TIMED CONTACT WHICH BEGINS TIMING WHEN ENERGIZED.

4 FOR UNITS WITH SUPPLY FAN V.F.D. OPTION. SEE INSET "A" FOR CONNECTIONS.

5 SEE APPLICABLE 5U16 SUPPLY VARIABLE FREQUENCY DRIVE DIAGRAM FOR BALANCE OF CIRCUIT.

TRANE
A DIVISION OF AMERICAN STANDARD INC.
ALL RIGHTS RESERVED
THIS DRAWING IS PROPRIETARY AND SHALL NOT BE DISCLOSED OUTSIDE OF TRANE WITHOUT THE CONSENT OF TRANE.

DRAWN BY: D SHANNON
DATE: 12-02-06
REPLACES: --
REVISION DATE: --
CAD SYSTEM USED: PRO/DIAGRAM
SIMILAR TO: --

FILE NUMBER:
DRAWING NUMBER: 2309-3674
SHEET: 1 OF 1
REV: B

ROOFTOP PACKAGED AIR CONDITIONER
DIAGRAM
SCHEMATIC AND CONNECTION - 2 PIECE
MODULATING NATURAL GAS HEAT - 1800/2500 MBH

NAME:CLKAJN OBJECT:2309_3674_1 DATE:17-Apr-07 13:26:55