ABBREVIATIONS	
1S72	SUP BYPASS SWITCH 6
F40-F42	VFD POWER FUSES
K40	BYPASS CONTACTOR
K41	DRIVE OUTPUT CONTACTOR
K42	RUN COMMAND RELAY
K43	VFD RUN STATUS RELAY
TB	TERMINAL BLOCK
U1	OVERLOAD
VFD	VARIABLE FREQUENCY DRIVE

DEVICE PREFIX LOCATION GUIDE	
AREA	LOCATION
1	INSIDE UNIT CONTROL BOX
2	CONDENSER SECTION
3	AIR HANDLER SECTION
4	HEATING SECTION
5	EXTERNAL FIELD MOUNTED DEVICE

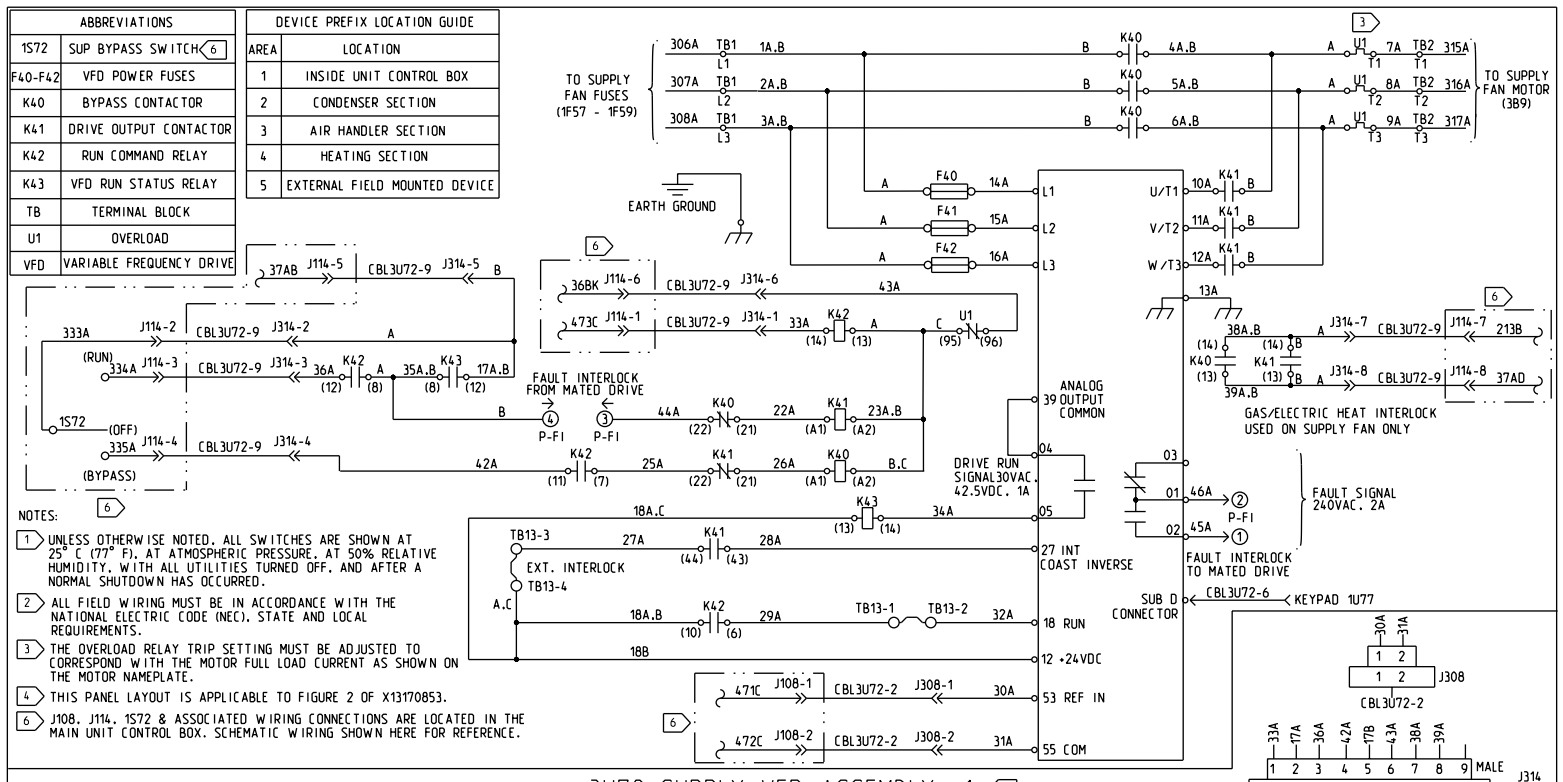

NOTES:

1. UNLESS OTHERWISE NOTED, ALL SWITCHES ARE SHOWN AT 25° C (77° F), AT ATMOSPHERIC PRESSURE, AT 50% RELATIVE HUMIDITY, WITH ALL UTILITIES TURNED OFF, AND AFTER A NORMAL SHUTDOWN HAS OCCURRED.
2. ALL FIELD WIRING MUST BE IN ACCORDANCE WITH THE NATIONAL ELECTRIC CODE (NEC), STATE AND LOCAL REQUIREMENTS.
3. THE OVERLOAD RELAY TRIP SETTING MUST BE ADJUSTED TO CORRESPOND WITH THE MOTOR FULL LOAD CURRENT AS SHOWN ON THE MOTOR NAMEPLATE.
4. THIS PANEL LAYOUT IS APPLICABLE TO FIGURE 2 OF X13170853.
6. J108, J114, 1S72 & ASSOCIATED WIRING CONNECTIONS ARE LOCATED IN THE MAIN UNIT CONTROL BOX. SCHEMATIC WIRING SHOWN HERE FOR REFERENCE.

3U72 SUPPLY VFD ASSEMBLY #1 4

IMPORTANT!
DO NOT ENERGIZE UNIT UNTIL CHECK-OUT AND START-UP PROCEDURE HAS BEEN COMPLETED.

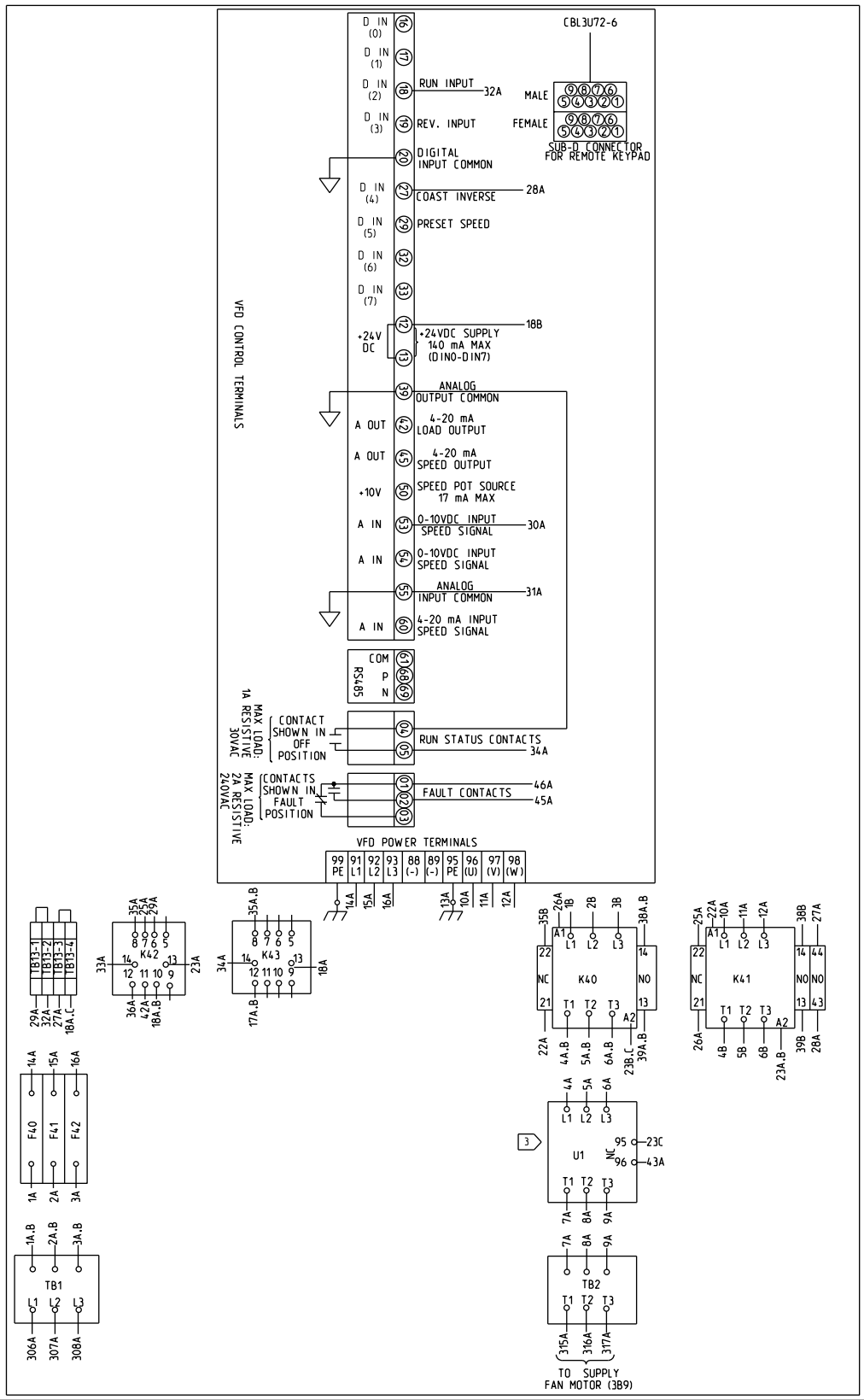

CAUTION

USE COPPER CONDUCTORS ONLY!

UNIT TERMINALS ARE NOT DESIGNED TO ACCEPT OTHER TYPES OF CONDUCTORS.

FAILURE TO DO SO MAY CAUSE DAMAGE TO THE EQUIPMENT.

ATTENTION

N'UTILISER QUE DES CONDUCTEURS EN CUIVRE!

LES BORNES DE L'UNITÉ NE SONT PAS CONÇUES POUR RECEVOIR D'AUTRES TYPES DE CONDUCTEURS.

L'UTILISATION DE TOUT AUTRE CONDUCTEUR PEUT ENDOMMAGER L'ÉQUIPEMENT.

PRECAUCIÓN

¡UTILICE ÚNICAMENTE CONDUCTORES DE COBRE!

LAS TERMINALES DE LA UNIDAD NO ESTÁN DISEÑADAS PARA ACEPTAR OTROS TIPOS DE CONDUCTORES.

SI NO LO HACE, PUEDE OCASIONAR DAÑO AL EQUIPO.

⚠ WARNING

HAZARDOUS VOLTAGE!

DISCONNECT ALL ELECTRIC POWER INCLUDING REMOTE DISCONNECTS AND FOLLOW LOCK OUT AND TAG PROCEDURES BEFORE SERVICING. INSURE THAT ALL MOTOR CAPACITORS HAVE DISCHARGED STORED VOLTAGE. UNITS WITH VARIABLE SPEED DRIVE, REFER TO DRIVE INSTRUCTIONS FOR CAPACITOR DISCHARGE.

FAILURE TO DO THE ABOVE BEFORE SERVICING COULD RESULT IN DEATH OR SERIOUS INJURY.

⚠ AVERTISSEMENT

TENSION DANGEREUSE!

COUPER TOUTES LES TENSIONS ET OUVRIR LES SECTIONNEURS À DISTANCE. PUIS SUIVRE LES PROCÉDURES DE VERROUILLAGE ET DES ÉTIQUETTES AVANT TOUTE INTERVENTION. VÉRIFIER QUE TOUS LES CONDENSATEURS DES MOTEURS SONT DÉCHARGÉS. DANS LE CAS D'UNITÉS COMPORTANT DES ENTRAÎNEMENTS À VITESSE VARIABLE, SE REPORTER AUX INSTRUCTIONS DE L'ENTRAÎNEMENT POUR DÉCHARGER LES CONDENSATEURS.

NE PAS RESPECTER CES MESURES DE PRÉCAUTION PEUT ENTRAÎNER DES BLESSURES GRAVES POUVANT ÊTRE MORTELLES.

⚠ ADVERTENCIA

¡VOLTAJE PELIGROSO!

DESCONECTE TODA LA ENERGÍA ELÉCTRICA, INCLUSO LAS DESCONEXIONES REMOTAS Y SIGA LOS PROCEDIMIENTOS DE CIERRE Y ETIQUETADO ANTES DE PROCEDER AL SERVICIO. ASEGÚRESE DE QUE TODOS LOS CAPACITORES DEL MOTOR HAYAN DESCARGADO EL VOLTAJE ALMACENADO. PARA LAS UNIDADES CON EJE DE DIRECCIÓN DE VELOCIDAD VARIABLE, CONSULTE LAS INSTRUCCIONES PARA LA DESCARGA DEL CONDENSADOR.

EL NO REALIZAR LO ANTERIORMENTE INDICADO, PODRÍA OCASIONAR LA MUERTE O SERIAS LESIONES PERSONALES.

TRANE

THIS DRAWING IS PROPRIETARY AND SHALL NOT BE COPIED OR ITS CONTENTS DISCLOSED TO OUTSIDE PARTIES WITHOUT THE CONSENT OF TRANE.

DRAWN BY: J. MORRIS
TRANE® DATE: 02/11/2009
REPLACES:
REVISION DATE:
CAD SYSTEM USED: PRO/E
SIMILAR TO: 2309-3200

FILE NUMBER:
DRAWING NUMBER: 2309-3577
SHEET: 1 OF 1
REV: B

ROOFTOP PACKAGED AIR CONDITIONER

SCHEMATIC AND CONNECTION DIAGRAM
SUPPLY FAN VARIABLE FREQUENCY
#1 DRIVE W/ BYPASS CONTROL