NOTES:

21 WIRING SHOWN IS FOR HOOKUP WITHOUT COMM. BOARD HOOK PPF14(VAV) OR PPF13(CV) TO RTRM J4. WITH OPTL. COMM. BOARD. HOOK PPF14 OR PPF13 TO COMM J2, P14 TO RTRM J4 AND P21 TO COMM J1. SEE INSET A FOR WIRE NUMBERS.

22 WIRE 36AE IS NOT USED FOR THE TC/TE/YC_420 OR TC/TE/YC_600.

23 UNITS WITH LO HEAT OPTION HAVE A SINGLE HEAT EXCHANGER. UNITS WITH HI HEAT OPTION HAVE TWO HEAT EXCHANGERS.

24 REQUIRED FOR OPT. REFERENCE ENTHALPY CONTROL.

25 REQUIRED FOR OPT. COMPARATIVE ENTHALPY CONTROL.

26 WIRES 51A, 52A & 53A (P5) REQUIRED FOR YC LOW GAS HEAT OPTION. WIRES 51D, 52D & 53D (P5) REQUIRED FOR YC HIGH GAS HEAT OPTION.

28 REQUIRED FOR OPTIONAL POWER EXHAUST.

29 OPTIONAL CLOGGED FILTER SWITCH.

30 REQUIRED FOR OPTIONAL VAV.

31 REQUIRED FOR OPTIONAL VFD.

32 SEE APPLICABLE VARIABLE FREQUENCY DRIVE DIAGRAM FOR BALANCE OF CIRCUIT.

33 PLUG(S) LOCATED IN MAIN CONTROL PANEL

34 WIRES REQUIRED ONLY FOR V.F.D. WITH BYPASS OPTION.

35 WIRES 154A & 155A (P34) REQUIRED FOR VAV W/ IGV OPTION. WIRES 154B & 155B (P35) REQUIRED FOR VAV W/ VFD OPTION.

37 REQUIRED FOR OPTIONAL 100% POWER EXAUST.

38 EBA REQUIRED FOR OPTIONAL FRESH AIR TRACKING EXAUST.

CAUTION

USE COPPER CONDUCTORS ONLY!

UNIT TERMINALS ARE NOT DESIGNED TO ACCEPT OTHER TYPES OF CONDUCTORS.

FAILURE TO DO SO MAY CAUSE DAMAGE TO THE EQUIPMENT.

ATTENTION

N'UTILISER QUE DES CONDUCTEURS EN CUIVRE!

LES BORNES DE L'UNITÉ NE SONT PAS CONÇUES POUR RECEVOIR D'AUTRES TYPES DE CONDUCTEURS.

L'UTILISATION DE TOUT AUTRE CONDUCTEUR PEUT ENDOMMAGER L'ÉQUIPEMENT.

PRECAUCIÓN

¡UTILICE ÚNICAMENTE CONDUCTORES DE COBRE!

LAS TERMINALES DE LA UNIDAD NO ESTÁN DISEÑADAS PARA ACEPTAR OTROS TIPOS DE CONDUCTORES.

SI NO LO HACE, PUEDE OCASIONAR DAÑO AL EQUIPO.

IMPORTANT!

DO NOT ENERGIZE UNIT UNTIL CHECK-OUT AND START-UP PROCEDURE HAS BEEN COMPLETED.

FUSE REPLACEMENT TABLE

FU1 FU2	208-230V	CLASS CC	20 AMP
	380-415V	CLASS CC	15 AMP
	460-575V	CLASS CC	15 AMP
FU3 FU4	208-230V	CLASS CC	15 AMP
	380-415V	N/A	N/A
	460-575V	N/A	N/A
FU5 FU6	208-230V	CLASS CC	15 AMP
	380-415V	CLASS CC	5 AMP
	460-575V	CLASS CC	5 AMP
FU20	208-230V	CLASS CC	10 AMP
FU21	460-575V	CLASS CC	5 AMP

11 X 17 METAL PLATE

TRANE

THIS DRAWING IS PROPRIETARY AND SHALL NOT BE COPIED OR ITS CONTENTS DISCLOSED TO OUTSIDE PARTIES WITHOUT THE CONSENT OF TRANE.

DRAWN BY: D. GOUTAM	TRANE® DATE: 11-30-07	FILE NUMBER: 2309-3554	DRAWING NUMBER: 2309-3556
REPLACES: -	REVISION DATE: -	SHEET: 1 OF 1	REV A
CAD SYSTEM USED: PRO/E	SIMILAR TO: 2309-3344		

VOYAGER 3

YC.27.5-35.VAV

MOD GAS HEAT

CONDENSER SECTION WIRING

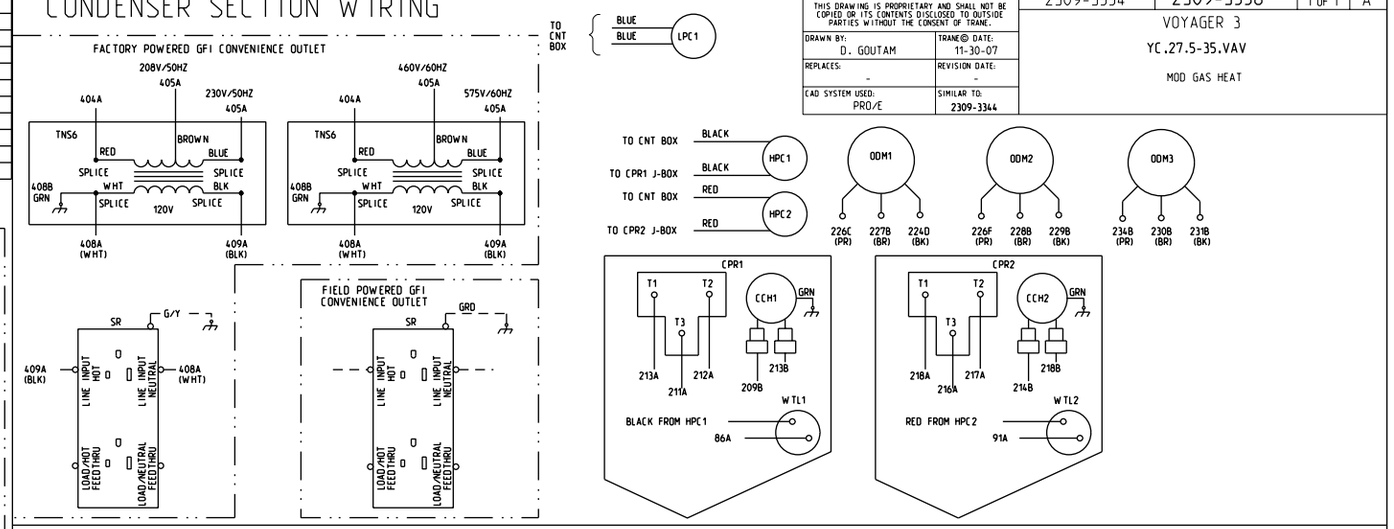

HEAT SECTION WIRING

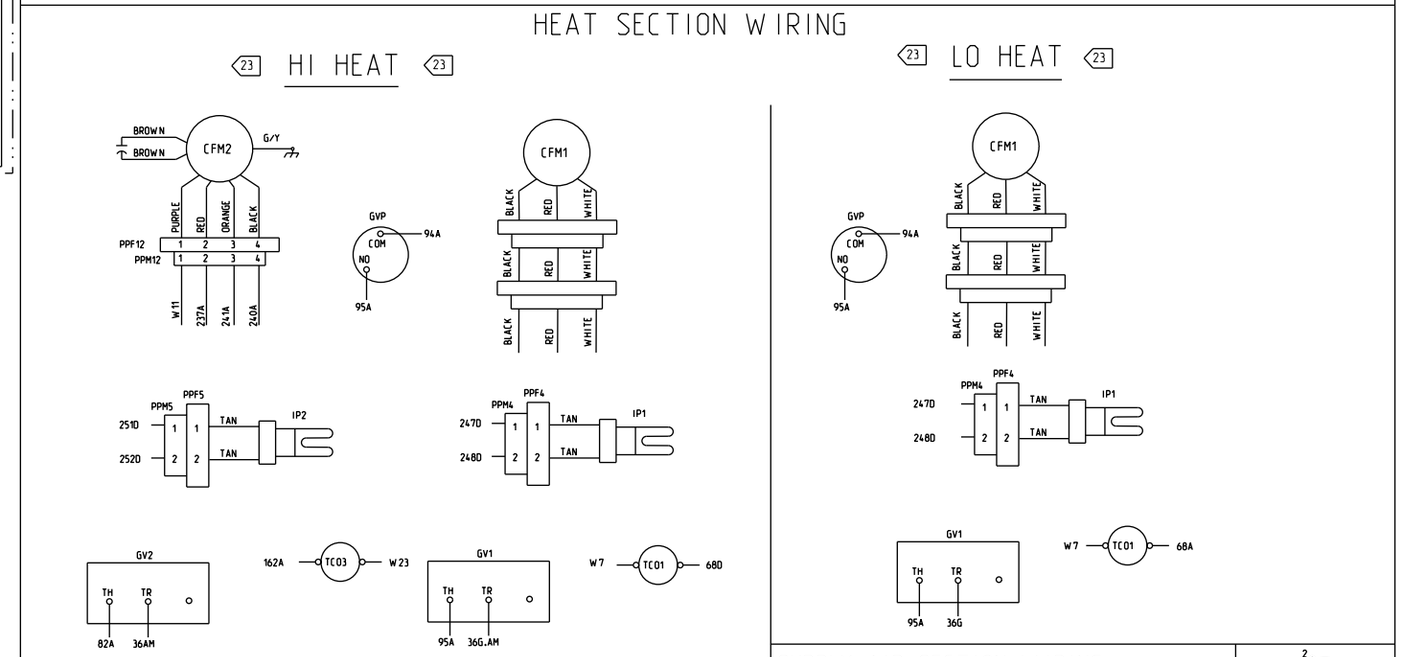

SUPPLY AIR SECTION WIRING

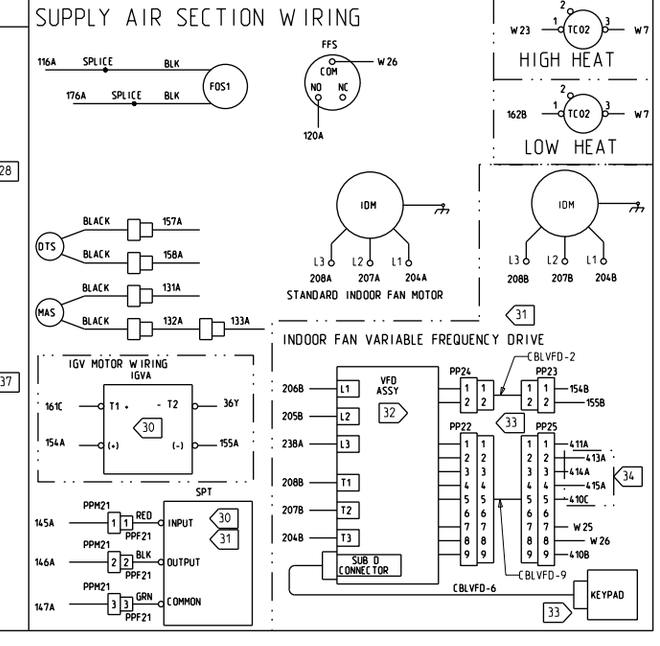
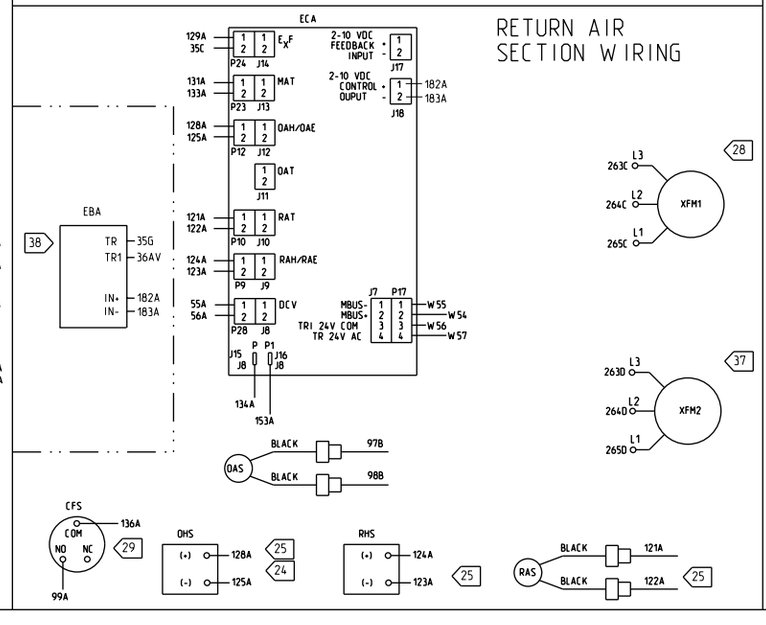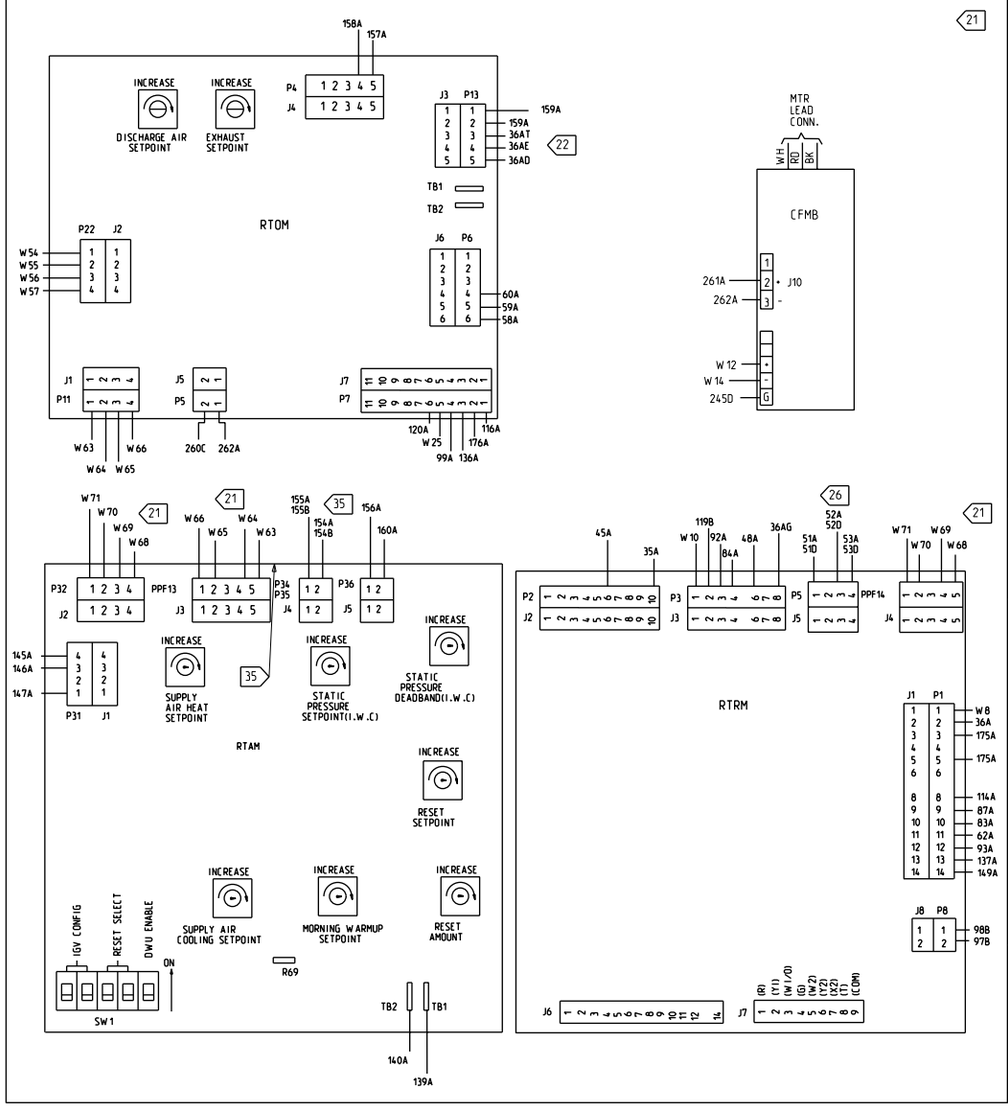
RETURN AIR SECTION WIRING