NOTES:

1. WIRING SHOWN IS FOR 460V. FOR 575V MOVE ALL WIRES FROM 460V TERMINAL TO 575V TERMINAL.
6. FUSE FU5,FU6,FU30,RELAY XFR AND ASSOCIATED WIRES ARE ONLY USED WITH POWER EXHAUST OPTION.
9. WIRING SHOWN FOR F CONTACTOR AND FCB1 IS FOR VAV ALL UNITS.EXCEPT THOSE WITH VFD.WHEN VARIABLE FREQUENCY DRIVE IS INSTALLED SEE INSET B.
10. WIRING SHOWN IS FOR OPTIONAL COMMUNICATION INTERFACE. COMMUNICATION WIRES FROM BMS TO TCI/LCI ARE TO BE WIRE TIED TO BOTTOM OF THE CONTROL BOX. SEE TCI/LCI LITERATURE FOR SWITCH SETTINGS.
11. FUSE FU20, FU21 AND SWITCH SRD ARE USED FOR OPTIONAL FACTORY POWER CONVENIENCE OUTLET. WIRES 400A(RD) AND 401A(BL) ARE CONNECTED TO FACTORY SUPPLIED DISCONNECT SWITCH.
12. MANUAL BYPASS SWITCH AND WIRES 410C, 413A, 414A, 415A OPTIONAL.
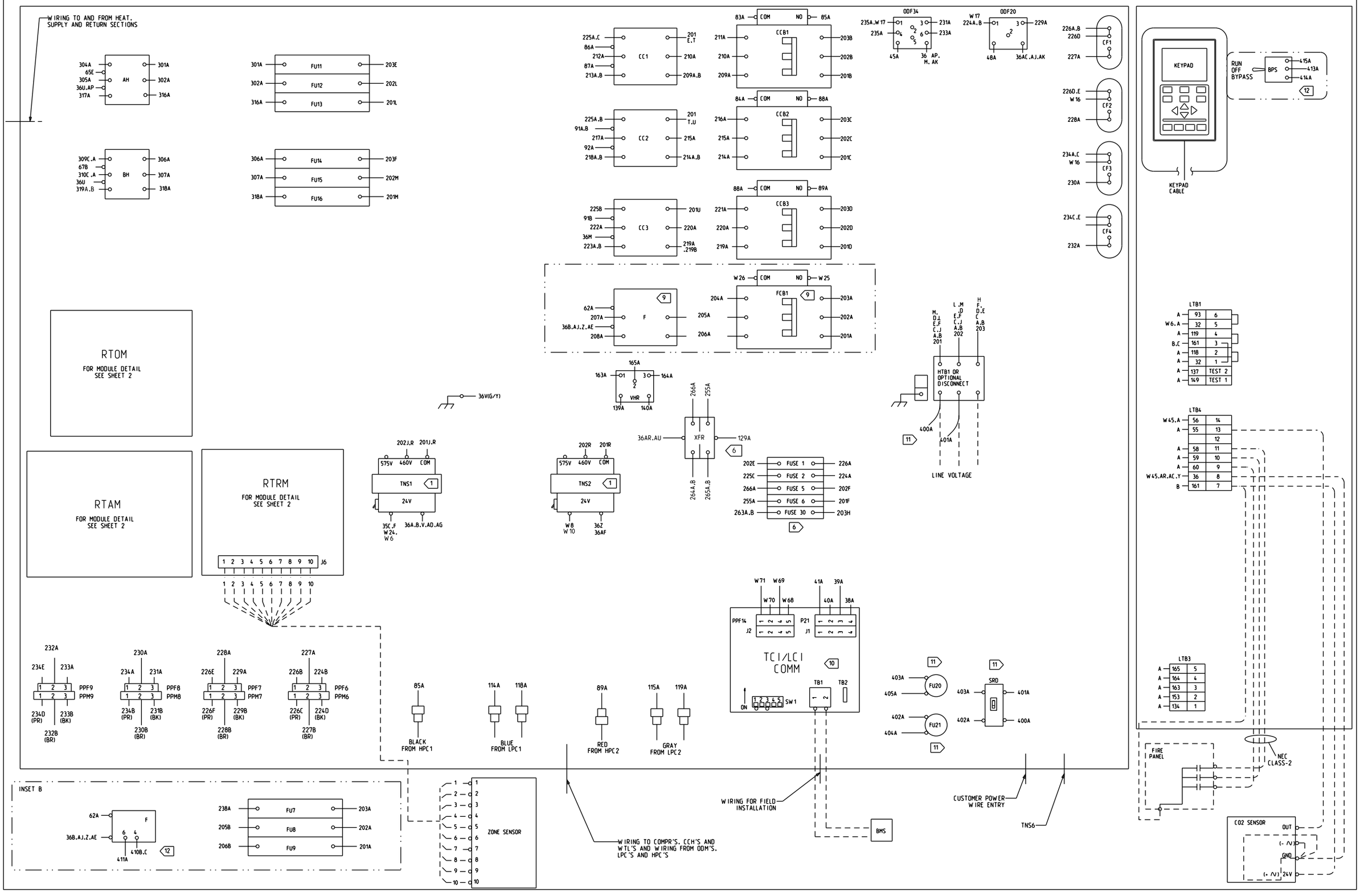
TRANE		FILE NUMBER: 2309-3485	DRAWING NUMBER: 2309-3518	SHEET: 1 OF 1	REV A
THIS DRAWING IS PROPRIETARY AND SHALL NOT BE COPIED OR ITS CONTENTS DISCLOSED TO OUTSIDE PARTIES WITHOUT THE CONSENT OF TRANE.		VOYAGER 3			
DRAWN BY: D. GOUTAM	TRANE® DATE: 11-30-07	CONTROL BOX CONNECTION FOR TE 40-50 TON 54KW 460/575 VOLT VARIABLE AIR VOLUME			
REPLACES:	REVISION DATE:				
CAD SYSTEM USED: PRO-E	SIMILAR TO: 2307-9087