NOTES:

9 WIRING SHOWN FOR F CONTACTOR AND FCB1 IS FOR VAV ALL UNITS.EXCEPT THOSE WITH VFD.WHEN VARIABLE FREQUENCY DRIVE IS INSTALLED SEE INSET B.

10 WIRING SHOWN IS FOR OPTIONAL COMMUNICATION INTERFACE. COMMUNICATION WIRES FROM BMS TO TCI/LCI ARE TO BE WIRE TIED TO BOTTOM OF THE CONTROL BOX. SEE TCI/LCI LITERATURE FOR SWITCH SETTINGS.

11 FUSE FU20. FU21 AND SWITCH SRD ARE USED FOR OPTIONAL FACTORY POWER CONVENIENCE OUTLET. WIRES 400A(RD) AND 401A(BL) ARE CONNECTED TO FACTORY SUPPLIED DISCONNECT SWITCH.

12 MANUAL BYPASS SWITCH AND WIRES 410C. 413A. 414A. 415A OPTIONAL.

6 FUSE FU5,FU6,FU30,RELAY XFR AND ASSOCIATED WIRES ARE ONLY USED WITH POWER EXHAUST OPTION.

11 X 17 METAL PLATE

⚠ WARNING
HAZARDOUS VOLTAGE!
DISCONNECT ALL ELECTRIC POWER. INCLUDING REMOTE DISCONNECTS. BEFORE SERVICING.

FAILURE TO DISCONNECT POWER BEFORE SERVICING CAN CAUSE SEVERE PERSONAL INJURY OR DEATH.

⚠ AVERTISSEMENT
VOLTAGE HASARDEUX!
DECONNECTEZ TOUTES LES SOURCES ELECTRIQUES INCLUANT LES DISJONCTEURS SITUES A DISTANCE AVANT D'EFFECTUER L'ENTRETIEN.

FAUTE DE DECONNECTEZ LA SOURCE ELECTRIQUE AVANT D'EFFECTUER L'ENTRETIEN PEUT ENTRAINER DES BLESSURES CORPORELLES SEVERES OU LA MORT.

⚠ CAUTION
USE COPPER CONDUCTORS ONLY!
UNIT TERMINALS ARE NOT DESIGNED TO ACCEPT OTHER TYPES OF CONDUCTORS.

FAILURE TO DO SO MAY CAUSE DAMAGE TO THE EQUIPMENT.

TRANE		FILE NUMBER: 2309-3485	DRAWING NUMBER: 2309-3509	SHEET: 1 OF 1	REV A
THIS DRAWING IS PROPRIETARY AND SHALL NOT BE COPIED OR ITS CONTENTS DISCLOSED TO OUTSIDE PARTIES WITHOUT THE CONSENT OF TRANE.		VOYAGER 3			
DRAWN BY: D. GOUTAM	TRANE® DATE: 11-30-07	CONTROL BOX CONNECTION FOR TE 35 TON 72KW 380/415 VOLT VARIABLE AIR VOLUME			
REPLACES:	REVISION DATE:				
CAD SYSTEM USED: PRO-E	SIMILAR TO: 2307-9078				
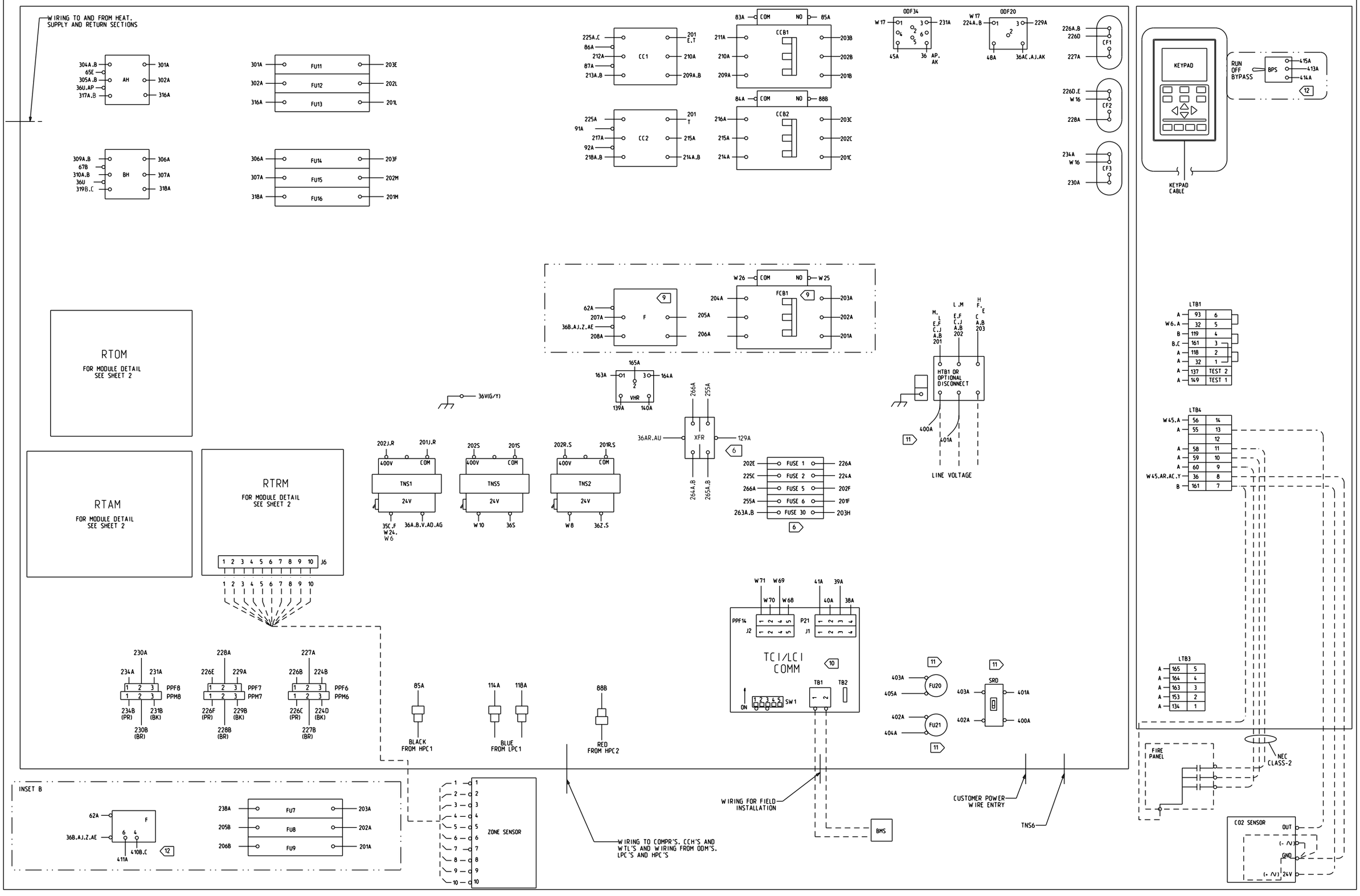
IMPORTANT!
DO NOT ENERGIZE UNIT UNTIL CHECK-OUT AND START-UP PROCEDURE HAS BEEN COMPLETED.