NOTES:

1. WIRING SHOWN IS FOR 460V. FOR 575V MOVE ALL WIRES FROM 460V TERMINAL TO 575V TERMINAL.
6. FUSE FU5,FU6,FU30,RELAY XFR AND ASSOCIATED WIRES ARE ONLY USED WITH POWER EXHAUST OPTION.
9. WIRING SHOWN FOR F CONTACTOR AND FCB1 IS FOR VAV ALL UNITS.EXCEPT THOSE WITH VFD.WHEN VARIABLE FREQUENCY DRIVE IS INSTALLED SEE INSET B.
10. WIRING SHOWN IS FOR OPTIONAL COMMUNICATION INTERFACE. COMMUNICATION WIRES FROM BMS TO TCI/LCI ARE TO BE WIRE TIED TO BOTTOM OF THE CONTROL BOX. SEE TCI/LCI LITERATURE FOR SWITCH SETTINGS.
11. FUSE FU20. FU21 AND SWITCH SRD ARE USED FOR OPTIONAL FACTORY POWER CONVENIENCE OUTLET. WIRES 400A(RD) AND 401A(BL) ARE CONNECTED TO FACTORY SUPPLIED DISCONNECT SWITCH.
12. MANUAL BYPASS SWITCH AND WIRES 410C. 413A. 414A. 415A OPTIONAL.

11 X 17 METAL PLATE

⚠ WARNING
HAZARDOUS VOLTAGE!
DISCONNECT ALL ELECTRIC POWER. INCLUDING REMOTE DISCONNECTS. BEFORE SERVICING.
FAILURE TO DISCONNECT POWER BEFORE SERVICING CAN CAUSE SEVERE PERSONAL INJURY OR DEATH.

⚠ AVERTISSEMENT
VOLTAGE HASARDEUX!
DECONNECTEZ TOUTES LES SOURCES ELECTRIQUES INCLUANT LES DISJONCTEURS SITUES A DISTANCE AVANT D'EFFECTUER L'ENTRETIEN.
FAUTE DE DECONNECTEZ LA SOURCE ELECTRIQUE AVANT D'EFFECTUER L'ENTRETIEN PEUT ENTRAINER DES BLESSURES CORPORELLES SEVERES OU LA MORT.

⚠ CAUTION
USE COPPER CONDUCTORS ONLY!
UNIT TERMINALS ARE NOT DESIGNED TO ACCEPT OTHER TYPES OF CONDUCTORS.
FAILURE TO DO SO MAY CAUSE DAMAGE TO THE EQUIPMENT.

TRANE
THIS DRAWING IS PROPRIETARY AND SHALL NOT BE COPIED OR ITS CONTENTS DISCLOSED TO OUTSIDE PARTIES WITHOUT THE CONSENT OF TRANE.

DRAWN BY: D. GOUTAM	TRANE® DATE: 11-30-07	FILE NUMBER: 2309-3485	DRAWING NUMBER: 2309-3504
REPLACES:	REVISION DATE:	SHEET: 1 OF 1	REV A
CAD SYSTEM USED: PRO-E	SIMILAR TO: 2307-9073		

VOYAGER 3
CONTROL BOX CONNECTION FOR TE 27.5-35 TON 36KW 460/575 VOLT VARIABLE AIR VOLUME
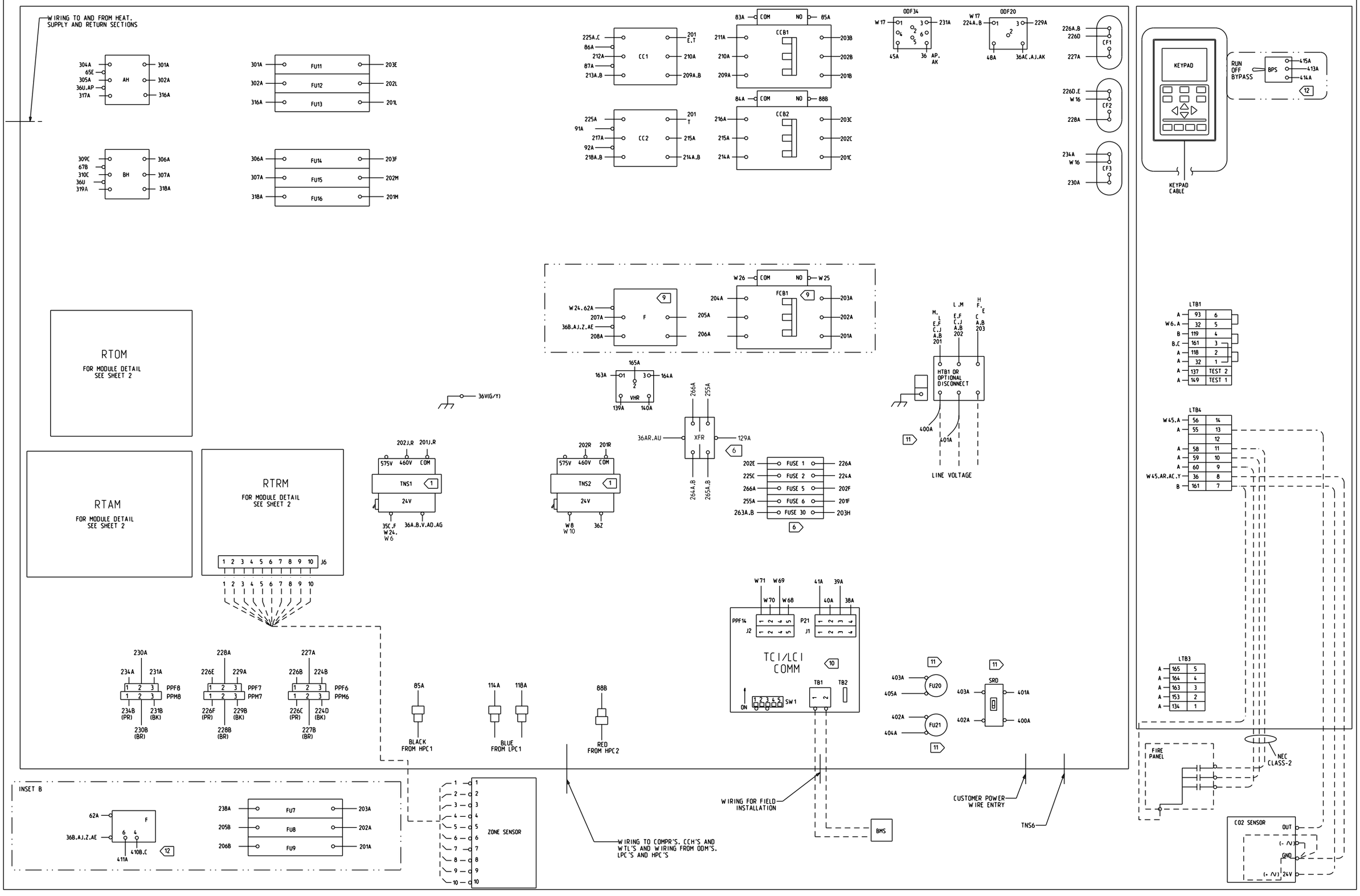
IMPORTANT!
DO NOT ENERGIZE UNIT UNTIL CHECK-OUT AND START-UP PROCEDURE HAS BEEN COMPLETED.